DEVELOPMENTAL SERVICES

STAFF RESIDENCES REHABILITATION
SITE WORK

26501 AVENUE 140
PORTERVILLE, TULARE COUNTY
CA 93257

PROJECT NUMBER: 000000000006803

SFM APPLICATION NUMBER: 25-S-3082-C- AC

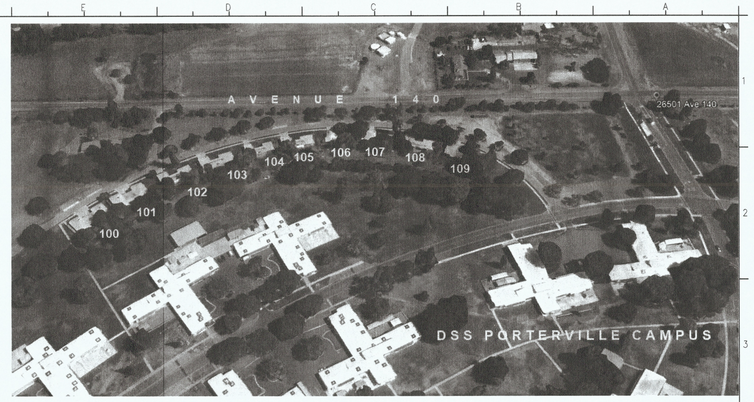

REVIEWED FOR DSA EXEMPTION
THE SCOPE OF WORK INVOLVED IN THIS PROJECT IS EXEMPT FROM THE DIVISION OF THE STATE ARCHITECT ACCESSIBILITY REQUIREMENTS IN ACCORDANCE WITH TITLE 24, CALIFORNIA CODE OF REGULATIONS, 2019 CALIFORNIA BUILDING CODE.

OFFICE OF THE STATE FIRE MARSHAL
APPROVED FIRE AND PANIC ONLY
Reviewed by: _____
Alvin Wong, Senior Architect
SEP 24 2025

Approval of this plan does not authorize or approve any omission or deviation from applicable regulations. Final approval is subject to field inspection. One set of approved plans shall be available on the project site at all times.

APPLICABLE CODES

PARTIAL LIST OF APPLICABLE CODES

2022 CALIFORNIA ADMINISTRATIVE CODE (CAC), PART 1, TITLE 24 CCR
2022 CALIFORNIA BUILDING CODE (CBC), PART 2, TITLE 24 CCR

2022 CALIFORNIA ELECTRICAL CODE (CEC), PART 3, TITLE 24 CCR

2022 CALIFORNIA MECHANICAL CODE (CMC), PART 4, TITLE 24 CCR

2022 CALIFORNIA PLUMBING CODE (CPC), PART 5, TITLE 24 CCR

2022 CALIFORNIA ENERGY CODE (CEC), PART 6, TITLE 24 CCR
2022 CALIFORNIA FIRE CODE (CFC), PART 9, TITLE 24 CCR

2022 CALIFORNIA EXISTING BUILDING CODE (CEBC), PART 10, TITLE 24 CCR
2022 CALIFORNIA HISTORIC BUILDING CODE

2022 CALIFORNIA REFERENCED STANDARDS CODE, PART 12, TITLE 24 CCR
TITLE 19 CCR, PUBLIC SAFETY, STATE FIRE MARSHAL REGULATIONS

PARTIAL LIST OF APPLICABLE STANDARDS

FOR A COMPLETE LIST OF APPLICABLE NFPA STANDARDS REFER TO 2022 CBC (SFM) CHAPTER 35 AND CALIFORNIA FIRE CODE (CFC) CHAPTER 80.

SEE CALIFORNIA BUILDING CODE, CHAPTER 35, FOR STATE OF CALIFORNIA AMENDMENTS TO THE NFPA STANDARDS

AMERICANS WITH DISABILITIES ACT 2010 STANDARDS INCLUDING:
- TITLE II REGULATIONS AT 28 CFR PART 35.151 AND;
- 2004 AMERICANS WITH DISABILITIES ACT ACCESSIBLE GUIDELINES (ADAAG) AT 36 CFR PART 1191 APPENDICES D AND C

WHERE THESE TWO DIFFER, 28 CFR PART 35.151 SHALL PREVAIL

SHEET INDEX

GENERAL

G001	COVER SHEET

CIVIL

C001	CIVIL GENERAL NOTES AND LEGEND
C002	FIRE ACCESS PLAN
C011	SITE EXISTING CONDITIONS
C021	SITE DEMOLITION PLAN
C022	PARTIAL SITE DEMOLITION PLAN A
C023	PARTIAL SITE DEMOLITION PLAN B
C024	PARTIAL SITE DEMOLITION PLAN C
C101	SITE IMPROVEMENT PLAN
C102	PARTIAL SITE IMPROVEMENT PLAN A
C103	PARTIAL SITE IMPROVEMENT PLAN B
C104	PARTIAL SITE IMPROVEMENT PLAN C
C201	SITE LAYOUT PLAN / KEY MAP
C202	PARTIAL SITE LAYOUT PLAN A
C203	PARTIAL SITE LAYOUT PLAN B
C204	PARTIAL SITE LAYOUT PLAN C
C301	TYPICAL GRADING PLAN
C401	SITE UTILITY PLAN, KEY MAP
C402	PARTIAL SITE UTILITY PLAN A
C403	PARTIAL SITE UTILITY PLAN B
C404	PARTIAL SITE UTILITY PLAN C
C501	CIVIL DETAILS
C502	CIVIL DETAILS

PROJECT TEAM

PROJECT MANAGER: ART IWASA
Art.Iwasa@dgs.ca.gov
(916) 376-1737

CIVIL: CHRIS ELLICOCK - SENIOR CIVIL ENGINEER

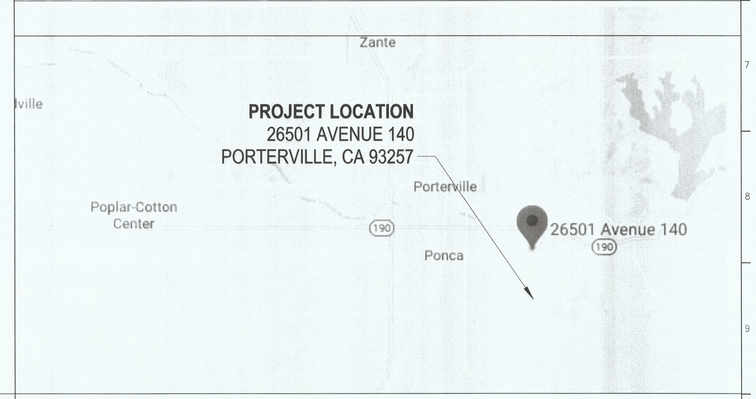

GENERAL NOTES

CHAPTER 33 CFC SUBMIT SITE SAFETY PLAN PRIOR TO START OF WORK

PROJECT SCOPE

1. REMOVE AND REPLACE CONCRETE SIDEWALK, DRIVEWAYS, AND LANDSCAPE AS SHOWN IN THESE PLANS.
2. REMOVE AND REPLACE DOMESTIC WATER PIPING FROM BUILDING CONNECTION TO FACILITY WATER MAIN AS SHOWN IN THESE PLANS. PROVIDE ALL NECESSARY PARTS TO MAKE COMPLETE SYSTEM.
3. REMOVE AND REPLACE SEWER LATERALS FROM BUILDINGS TO SEWER MAIN AS SHOWN IN THESE PLANS. PROVIDE ALL NECESSARY PARTS TO MAKE COMPLETE SYSTEM.
4. REMOVE AND REPLACE WOOD FENCING IN KIND AS SHOWN IN THESE DRAWINGS.
5. PATCH AC PAVEMENT AS INDICATED IN THESE DRAWINGS.
6. PROVIDE PERIMETER DRAINS AROUND BUILDINGS AS SHOWN IN THESE DRAWINGS.
7. ALL OTHER WORK INDICATED IN THE PLANS.

INDEX LEGEND

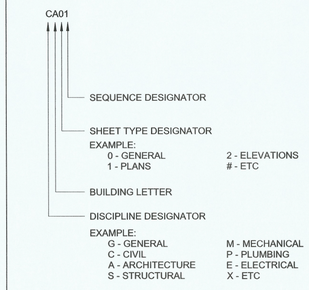

KEY PLAN

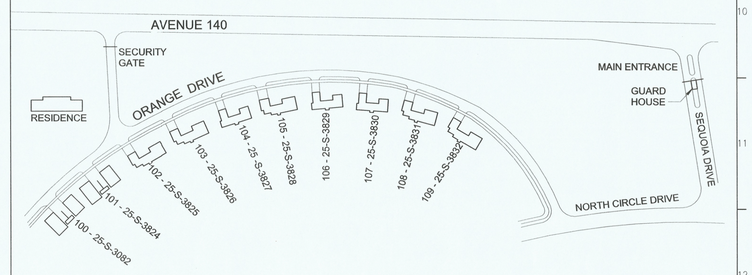

DGS GENERAL SERVICES

Department of General Services
Architecture & Engineering Sections
State of California
Real Estate Services Division
Project Management & Development Branch
707 Third Street, Suite 4-105
West Sacramento, California 95605

REGISTERED PROFESSIONAL ENGINEER
CHRIS ELLICOCK
C 94140
CIVIL
STATE OF CALIFORNIA
8/28/25

Issue		
No.	Date	Description
1	8/28/25	

Project
STAFF RESIDENCES REHABILITATION
26501 AVENUE 140
PORTERVILLE, TULARE COUNTY
CA 93257

DEVELOPMENTAL SERVICES

Supervisor	Designed	Drawn
J.Digiorgio	C.Ellicock	C.Ellicock

DSA App No.	SFM Permit No.
N/A	25-S-3082-C- AC

Sheet Title
COVER SHEET

Project Number
000000000006803

Reference North

Sheet Scale

Sheet Number
G001

ISSUE DATE: OCTOBER 28, 2026

Copyright © 2020, California Department of General Services Real Estate Services Division

9/22/2021 11:18:09 AM C:\Users\dkeltgen\Documents\000803_ARC_CENTRAL_Elena.Keltgen.rvt

R | Q | P | O | N | M | L | K | J | I | H | G | F | E | D | C | B | A

24 X 36

CIVIL PLAN ABBREVIATIONS

AB	AGGREGATE BASE
AC	ASPHALT CONCRETE
ADA	AMERICANS WITH DISABILITIES ACT
ARV	AIR RELEASE VALVE
ASPH	ASPHALT CONCRETE
AST	ABOVE GROUND STORAGE TANK
BC	BEGIN CURVE
BFP	BACKFLOW PREVENTER
BLDG	BUILDING
BM	BENCH MARK
BOT	BOTTOM
BV	BALL VALVE
BVC	BEGIN VERTICAL CURVE
BW	BACK OF WALK OR BARBED WIRE
C/L	CENTERLINE
CB	CATCH BASIN
CIP	CAST IRON PIPE
CJ	COLD JOINT
CLF	CHAIN LINK FENCE
CMP	CORRUGATED METAL PIPE
CSP	CORRUGATED STEEL PIPE
CONC	CONCRETE
COTG	CLEANOUT TO GRADE
CPT	CONTROL POINT
CR	COLD RETURN PIPING
CTB	CEMENT TREATED BASE
CV	CHECK VALVE
CW	COLD WATER
DF	DOUGLAS FIR
DIP	DUCTILE IRON PIPE
DI	DRAIN INLET
DIA	DIAMETER
DS	DOWNSPOUT
DW	DOMESTIC WATER
DWY	DRIVEWAY
(E)	EXISTING
EA	EACH
EC	END CURVE
EG	EXISTING GROUND/GRADE
EJ	EXPANSION JOINT
EL	ELEVATION
ELEV	ELEVATION
EM	ELECTRIC METER
EOC	EDGE OF CONCRETE
EP	EDGE OF PAVEMENT
PB	ELECTRIC PULLBOX
EV	ELECTRIC VAULT
EVC	END VERTICAL CURVE
EW	EACH WAY
F	FAUCET
F.F	FINISH FLOOR ELEVATION
FDC	FIRE DEPARTMENT CONNECTION ASSEMBLY
FD	FLOOR DRAIN
FG	FINISH ELEVATION/GRADE
FH	FIRE HYDRANT
FIPT	FEMALE IRON PIPE THREAD
FL	FLOW LINE
FLG	FLANGE
FM	FORCE MAIN
FNC	FENCE
FP	FLAG POLE
FS	FINISH SURFACE ELEVATION
GA	GAUGE
GALV	GALVANIZED
GB	GRADE BREAK
GM	GAS METER
GP	GUARD POST
GR	GRATE
GSP	GALVANIZED STEEL PIPE
GV	GATE VALVE
H/C	ACCESSIBLE
H	HORIZONTAL
HB	HOSE BIB
HHWP	HEATING HOT WATER RETURN
HHWS	HEATING HOT WATER SUPPLY
HP	HIGH POINT
HPG	HIGH PRESSURE GAS LINE
HWL	HEADWALL OR HIGH WATER LEVEL
ID	INSIDE DIAMETER
IE	INVERT ELEVATION
IRV	IRRIGATION VALVE
IRR	IRRIGATION
JP	JOINT POLE
L	LENGTH OR LONG
LF	LINEAR FEET
LPG	LIQUEFIED PETROLEUM GAS
LP	LOW POINT
LWL	LOW WATER LEVEL
MAX	MAXIMUM
MH	MANHOLE
MIPT	MALE IRON PIPE THREAD
MPG	MEDIUM PRESSURE GAS LINE
MW	MONITORING WELL
NIC	NOT IN CONTRACT
NST	STANDARD FIRE HOSE THREAD
NTS	NOT TO SCALE
OC	ON CENTER
OD	OUTSIDE DIAMETER
OF	OVERFLOW
OHE	OVERHEAD ELECTRICAL LINE
PCC	PORTLAND CEMENT CONCRETE OR POINT OF COMPOUND CURVE
PE	POLYETHYLENE
PI	POINT OF INTERSECTION
PL	PROPERTY LINE
POC	PONT OF CONNECTION
POC	POINT ON CURVE
POT	PATH OF TRAVEL OR POINT OF TANGENT
PP-TP	POWER & TELEPHONE POLE
PRC	POINT OF REVERSE CURVE
PT	PRESSURE TREATED
PVC	POLYVINYL CHLORIDE
RCP	REINFORCED CONCRETE PIPE
RS	RECORD OF SURVEY
R	RADIUS
RL	RIDGE LINE
RG	RAIN GAUGE
ROW	RIGHT OF WAY
RPBP	REDUCED PRESSURE BACKFLOW PREVENTER
RSP	ROCK SLOPE PROTECTION
PRV	PRESSURE REGULATOR VALVE
RW	RETAINING WALL
RWL	RAIN WATER LEADER
RWT	RETAINING WALL TOP ELEVATION
S	SLOPE
SS	SANITARY SEWER OR STAINLESS STEEL
SSCO	SEWER CLEAN OUT
SD	STORM DRAIN PIPELINE
SDJB	STORM DRAIN JUNCTION BOX
SFL	SWALE FLOW LINE
SSL	SANITARY SEWER LATERAL
SMH	SEWER MANHOLE
SP	STAND PIPE
SSM	SANITARY SEWER MAIN
SSMH	SANITARY SEWER MANHOLE
ST	STEAM
STA	STATION
STL	STREET LIGHT
STR	STAIRS
SWK	SIDEWALK
SWB	STREET WASHERBOX
TBC	TOP BACK OF CURB ELEVATION
TBW	TOP BACK OF WALK ELEVATION
TC	TOP OF CURB ELEVATION
TL	TANK LENGTH
TOW	TOP OF WALL ELEVATION
TP	TOP OF PAVEMENT ELEVATION
TS	TREE STUMP OR TRAFFIC SIGNAL OR TUBULAR STEEL
TSCB	TRAFFIC SIGNAL CONTROL BOX
TW	TANK WIDTH
TYP	TYPICAL
UGC	UNDERGROUND CABLE LINE
UGE	UNDERGROUND ELECTRIC LINE
UGT	UNDERGROUND TELEPHONE LINE
UL	UNLEADED
UP	UTILITY POLE
UST	UNDERGROUND STORAGE TANK
VC	VITRIFIED CLAY OR VERTICAL CURVE
V	VERTICAL
VP	VENT PIPE
W	WATER OR WIDE
W/	WITH
WB	WATER BOX
WH	WHARF HYDRANT
WL	WATER LINE
WM	WATER METER
WO	WASTE OIL
WPJ	WEAKENED PLANE JOINT
WT	WATER TANK
WV	WATER VALVE
WWM	WELDED WIRE MESH

GENERAL NOTES

1. THE CONTRACTOR SHALL BE RESPONSIBLE FOR PROTECTION OF ALL EXISTING SURVEY MONUMENTS AND OTHER SURVEY MARKERS DURING CONSTRUCTION. ALL SUCH MARKERS OR MONUMENTS DESTROYED DURING CONSTRUCTION SHALL BE REPLACED AND RE-ESTABLISHED AT THE CONTRACTOR'S EXPENSE. RE-ESTABLISHMENT OF SURVEY MONUMENTS SHALL BE IN ACCORDANCE WITH THE CALIFORNIA STATE LAND SURVEYOR'S ACT.

2. CONTRACTOR SHALL INSTALL TEMPORARY CHAIN LINK FENCE AROUND THE PROJECT SITE. HOWEVER, THE CONTRACTOR SHALL NOT CLOSE OFF ANY VEHICLE DRIVE AISLES AND SHALL ALLOW EMPLOYEE ACCESS TO THE FACILITY.

3. CONTRACTOR SHALL, AT ALL TIMES, KEEP THE PREMISES FREE FROM ACCUMULATION OF WASTE MATERIALS OR RUBBISH CAUSED BY HIS WORK. AT THE COMPLETION OF THE WORK REMOVE ALL RUBBISH, TOOLS, SURPLUS MATERIALS AND LEAVE THE JOB IN A BROOM CLEAN CONDITION.

4. SELECTIVE DEMOLITION SHALL BE DONE IN ACCORDANCE WITH THE CONSTRUCTION DOCUMENTS. REPAIR ANY DEMOLITION PERFORMED IN EXCESS OF THAT REQUIRED. RETURN STRUCTURES AND SURFACES TO CONDITIONS EXISTING PRIOR TO COMMENCEMENT OF SELECTIVE DEMOLITION. REPAIR ADJACENT CONSTRUCTION OR SURFACES SOILED OR DAMAGED BY SELECTIVE DEMOLITION WORK.

5. A LOCATION FOR THE CONTRACTOR'S CORPORATION YARD WILL BE DESIGNATED WITHIN THE SITE BY THE STATE. CONTRACTOR IS PERMITTED TO FENCE THIS AREA TO PROTECT OFFICES, STORED MATERIAL AND EQUIPMENT. CONTRACTOR IS RESPONSIBLE FOR SECURING HIS FACILITIES FROM THEFT AND VANDALISM.

6. THESE DRAWINGS DO NOT CONTAIN THE NECESSARY COMPONENTS FOR CONSTRUCTION SAFETY. WORKER AND PEDESTRIAN PROTECTION SHALL BE PROVIDED AND MAINTAINED BY THE CONTRACTOR AT THE CONTRACTOR'S EXPENSE. THE CONTRACTOR SHALL BE RESPONSIBLE FOR COMPLIANCE WITH ALL CURRENTLY APPLICABLE SAFETY LAWS OF ANY JURISDICTIONAL BODY, INCLUDING BUT NOT LIMITED TO OSHA REQUIREMENTS. FOR INFORMATION PLEASE CONTACT THE STATE INDUSTRIAL SAFETY DEPARTMENT (916-455-5818).

7. THE CONTRACTOR SHALL BE FINANCIALLY RESPONSIBLE FOR THE MAINTENANCE OR REPAIR OF OFFSITE STREET SURFACES WHERE DAMAGE IS SUSTAINED BECAUSE OF THE CONSTRUCTION TRAFFIC.

8. CONSTRUCTION NOISE SHALL BE IN COMPLIANCE WITH THE LOCAL AGENCY'S REQUIREMENTS AND REGULATIONS. CONSULT THE LOCAL AGENCY FOR SPECIFIC RESTRICTIONS AND HOURS OF OPERATION.

9. SIGN CALLOUTS REFERENCE THE CALIFORNIA MANUAL ON UNIFORM TRAFFIC CONTROL DEVICES (CAMUTCD).

10. ALL FLATWORK AND CURBS SHALL BE CONSTRUCTED TO COMPLY WITH CURRENT TITLE 24 AND ADA ACCESSIBILITY LAWS, REGULATIONS AND STANDARDS. THIS REQUIRES "EXTRA EFFORT" IN ACHIEVING THE ACCURACY OF THE GRADES AND SLOPES REQUIRED. PRIOR TO POURING ANY CURB OR FLATWORK AROUND THE PERIMETER OF ANY BUILDING OR ACCESSIBLE PARKING AREA, THE CONTRACTOR SHALL VERIFY THAT THE GRADE OF THE FINISHED FLOOR AND THE FLATWORK/CURB FORMS ARE IN THE PROPER GRADE DIFFERENTIAL PRIOR TO POURING CONCRETE ON ANY ACCESSIBLE PATH OF TRAVEL. NOTIFY THE PROJECT DIRECTOR IMMEDIATELY PRIOR TO PROCEEDING IF DISCREPANCIES ARE FOUND.

11. THE CONTRACTOR SHALL BE RESPONSIBLE FOR REPORTING ALL CONFLICTS, ERRORS, OMISSIONS, ETC. TO THE STATE PROJECT DIRECTOR IMMEDIATELY UPON DISCOVERY. IF SO DIRECTED BY THE STATE ENGINEER, THE CONTRACTOR SHALL STOP WORK UNTIL MITIGATION CAN BE MADE. ANY COSTS INCURRED RESULTING FROM THE CONTRACTOR'S FAILURE TO STOP WORK AS DIRECTED SHALL BE THE RESPONSIBILITY OF THE CONTRACTOR.

12. APPROVAL OF THESE PLANS DOES NOT AUTHORIZE OR APPROVE ANY OMISSION OR DEVIATION FROM APPLICABLE REGULATIONS. FINAL APPROVAL IS SUBJECT TO FIELD INSPECTION. ONE SET OF APPROVED PLANS AND SPECIFICATIONS SHALL BE AVAILABLE ON THE PROJECT SITE AT ALL TIMES.

13. THE CONTRACTOR SHALL BE RESPONSIBLE FOR DETERMINING THE EXACT LOCATION OF ALL EXISTING UTILITIES AND FOR THE PROTECTION AND REPAIR OF DAMAGE TO THEM. THE CONTRACTOR SHALL BE RESPONSIBLE FOR CONTACTING ALL UTILITIES AS TO THE LOCATION OF ALL UNDERGROUND FACILITIES CALL "UNDERGROUND SERVICE ALERT" 811 OR USANORTH811.ORG, 48 HOURS BEFORE DIGGING. ALSO NOTIFY THE ENGINEER 48 HOURS PRIOR TO DIGGING.

14. THE CONTRACTOR IS RESPONSIBLE FOR SITE CONDITIONS INCLUDING PUBLIC SAFETY, DUST CONTROL, AND EROSION AND SEDIMENT CONTROL; CONTINUALLY DURING WORKING HOURS.

15. THE CONTRACTOR SHALL MAINTAIN AN ACCURATE RECORD OF ALL APPROVED DEVIATIONS FROM THE PLANS BEFORE AND DURING CONSTRUCTION. UPON COMPLETION OF WORK, ONE SET OF RED-LINED AS-BUILT PLANS SHALL BE SUBMITTED TO THE STATE FOR REVIEW AND ACCEPTANCE.

16. THE TYPES, LOCATIONS, SIZES, AND/OR DEPTHS OF EXISTING UNDERGROUND UTILITIES AS SHOWN ON THESE IMPROVEMENT PLANS WERE OBTAINED FROM SOURCES OF VARYING RELIABILITY. THE CONTRACTOR IS CAUTIONED THAT ONLY ACTUAL EXCAVATION WILL REVEAL THE TYPES, EXTENT, SIZES, LOCATIONS, AND DEPTHS OF SUCH UNDERGROUND UTILITIES. A REASONABLE EFFORT HAS BEEN MADE TO LOCATE AND DELINEATE ALL KNOWN UNDER-GROUND UTILITIES. HOWEVER THE STATE CAN ASSUME NO RESPONSIBILITY FOR THE COMPLETENESS OR ACCURACY OF ITS DELINEATION OF SUCH UNDERGROUND UTILITIES NOR FOR THE EXISTENCE OF OTHER BURIED OBJECTS OR UTILITIES WHICH MAY BE ENCOUNTERED BUT WHICH ARE NOT SHOWN ON THESE DRAWINGS.

17. THE CONTRACTOR SHALL BE RESPONSIBLE FOR NOTIFYING THE STATE PROJECT DIRECTOR 48-HOURS PRIOR TO COMMENCING WORK AND 24-HOURS PRIOR TO RESUMPTION AFTER INTERRUPTION. REQUESTS FOR INSPECTION SHALL BE GIVEN 72-HOURS IN ADVANCE, AND BE PERFORMED BY THE STATE PROJECT DIRECTOR OR THEIR AUTHORIZED REPRESENTATIVE.

18. CONTRACTOR SHALL COMPLETE ALL FIELD ENGINEERING AND STAKING AND RESTAKING AS REQUIRED AFTER STATE REVIEW. SUBMIT A DIMENSIONALLY ACCURATE STAKING PLAN SHOWING EXISTING UTILITIES AND NEW CONSTRUCTION. PLAN SHALL ACCURATELY REPRESENT THE LOCATIONS OF FIELD STAKE-OUT. THE STATE MAY MODIFY THE CONTRACTOR'S PLAN TO SUIT REQUIREMENTS OF THE FACILITY. EXCAVATION AND TRENCHING MAY NOT BEGIN UNTIL THE CONTRACTOR HAS RECEIVED WRITTEN APPROVAL FOR THE STAKING PLAN (FROM STATE).

19. ADJUST ACTUAL TRENCH LOCATIONS TO AVOID EXISTING AND PROPOSED MECHANICAL/ELECTRICAL FACILITIES. REFER TO LANDSCAPE, PLUMBING AND ELECTRICAL DRAWINGS FOR ADDITIONAL INFORMATION. DIMENSION REVISED TRENCH LOCATIONS ON "AS-BUILT" PLANS.

20. ALL WORK SHALL BE ACCOMPLISHED WHILE THE STATE MAINTAINS FULL OPERATION OF THE FACILITY. CONNECTIONS AND ACTIVATION OF NEW UTILITIES INTO THE FACILITY SHALL BE COORDINATED WITH THE STATE.

21. THE FACILITY SHALL BE OPEN DURING CONSTRUCTION. CONTRACTOR TO PROVIDE AND MAINTAIN PUBLIC ACCESS AND EMERGENCY EGRESS TO/FROM BUILDING AT ALL TIMES DURING CONSTRUCTION.

22. CONTRACTOR SHALL PROTECT CONSTRUCTION AREA WHILE MAINTAINING UNINTERRUPTED ROADWAY CIRCULATION DURING NORMAL OPERATING HOURS.

23. CONTRACTOR SHALL DESIGN AND IMPLEMENT BEST MANAGEMENT PRACTICES (BMPs) TO PREVENT ALL CONSTRUCTION POLLUTANTS OR POLLUTION FROM CONTACTING STORM WATER AND KEEP ALL PRODUCTS OF EROSION FROM ENTERING RECEIVING WATERS. CONTRACTOR SHALL SUBMIT BMPs TO THE STATE FOR APPROVAL PRIOR TO START OF CONSTRUCTION. SEE SPECIFICATIONS.

GRADING NOTES

1. ALL GRADING SHALL BE ACCOMPLISHED IN ACCORDANCE WITH THESE PLANS AND THE CURRENT VERSION OF THE CALIFORNIA BUILDING CODE.

2. THE CONTRACTOR SHALL HAVE ALL BMP'S IN PLACE PRIOR TO ANY GROUND DISTURBANCE ON SITE.

3. THE CONTRACTOR SHALL LOCATE ALL EXISTING UNDERGROUND UTILITIES CROSSING THE PROPERTY PRIOR TO GRADING THE SITE.

4. THE CONTRACTOR SHALL CONTACT, COORDINATE, FOLLOW ALL REQUIREMENTS AND PAY ALL ASSOCIATED FEES FOR LOCAL UTILITY COMPANIES PERTAINING TO THEIR UTILITY LINES. THESE UNDERGROUND UTILITIES SHALL BE PROTECTED DURING CONSTRUCTION AND EVERY EFFORT MADE TO AVOID INTERFERING WITH OR DISRUPTING THESE EXISTING LINE.

DEMOLITION NOTES

1. REMOVE AND DISPOSE OF RUBBLE AND WASTE IN A STATE APPROVED LANDFILL IN ACCORDANCE WITH DIVISION 01 SPECIFICATIONS. PAY ALL DUMP FEES.

2. ALL SURFACE VOIDS SHALL BE FILLED WITH SUITABLE GRAVEL OR BASE MATERIAL AND COMPACTED TO 90% RELATIVE COMPACTION.

3. SALVAGE ITEMS NOTED AND STORE OR REINSTALL AS DIRECTED.

4. ASPHALT CONCRETE SURFACES SHALL BE SAWCUT NEATLY IN STRAIGHT AND PARALLEL LINES. EXPOSED EDGES SHALL BE TREATED WITH AN ASPHALT EMULSION TACK COAT PRIOR TO PAVING. EXPOSED AGGREGATE BASE SHALL BE GRADED, SHAPED, COMPACTED AND TREATED WITH PRIME COAT PRIOR TO PAVING.

EROSION CONTROL NOTES

1. PROVIDE EROSION & SEDIMENT CONTROL BMP's IN ACCORDANCE WITH CALIFORNIA STORMWATER QUALITY ASSOCIATION (CASQA) STORMWATER BEST MANAGEMENT PRACTICE HANDBOOKS.

2. ALL WORK EQUIPMENT SHALL BE WASHED AT A LOCATION OFF THE PROJECT SITE.

3. CONTRACTOR SHALL PERFORM LITTER REMOVAL IN CONJUNCTION WITH CONSTRUCTION ACTIVITIES.

4. STRAW WATTLES SHALL BE PLACED IN APPROPRIATE AREAS TO PREVENT SILT/SEDIMENT FROM ENTERING STORM DRAIN AT ALL TIMES DURING CONSTRUCTION AND REMAIN IN PLACE UPON FINAL COMPLETION.

5. ALL AREAS DISTURBED DURING CONSTRUCTION SHALL BE PROTECTED FROM EROSION. HYDROSEED, HYDROSEED PLACED DURING THE WET SEASON SHALL USE A SECONDARY EROSION PROTECTION METHOD SUCH AS SOIL BINDER OR EROSION CONTROL BLANKETS/MATS.

6. IN PREPARATION FOR RAIN EVENTS, ANY LOOSE SEDIMENTS/SILT OR OTHER MATERIALS SHALL BE COVERED WITH WOVEN FABRIC AND SURROUNDED BY STRAW WATTLES.

7. THE CONTRACTOR IS RESPONSIBLE FOR DUST CONTROL DURING ALL PHASES OF CONSTRUCTION. WATER OR OTHER APPROVED METHODS SHALL BE USED TO CONTROL WINDBLOWN DUST AND PARTICLES. DUST AND PARTICLES SHALL NOT LEAVE THE CONSTRUCTION SITE. DUST CONTROL SHALL BE UTILIZED OVER ALL DISTURBED AREAS (UNLESS SUITABLY STABILIZED) REGARDLESS OF WHETHER ACTIVE WORK IS UNDERWAY. THE FOLLOWING MEASURE SHALL BE IMPLEMENTED:
   - 7.1. WATER EXPOSED SURFACES, GRADED AREAS, STORAGE PILES, AND HAUL ROADS AT LEAST TWICE DAILY.
   - 7.2. MINIMIZE THE AMOUNT OF DISTURBED AREA. THE AMOUNT OF MATERIAL ACTIVELY WORKED, AND THE AMOUNT OF MATERIAL STOCKPILED.
   - 7.3. LIMIT ONSITE CONSTRUCTION VEHICLE SPEEDS TO 15 MPH.
   - 7.4. SWEEP OR WASH PAVED STREETS ADJACENT TO PROJECT CONSTRUCTION SITES AT LEAST ONCE A DAY TO REMOVE ACCUMULATED DUST/DEBRIS.
   - 7.5. MAINTAIN AT LEAST TWO FEET OF FREEBOARD WHEN TRANSPORTING SOIL OR OTHER MATERIAL BY TRUCK.

8. EROSION CONTROL BEST MANAGEMENT PRACTICES (BMP's) SHALL BE INSTALLED AND MAINTAINED DURING THE WET SEASON (OCTOBER 1 THROUGH APRIL 30). SEDIMENT CONTROL BMP's SHALL BE INSTALLED AND MAINTAINED ALL YEAR ROUND.

9. ALL AREAS DISTURBED DURING CONSTRUCTION SHALL BE PROTECTED FROM EROSION DURING THE WET SEASON (OCTOBER 1 THROUGH APRIL 30).

10. NO WORK SHALL TAKE PLACE DURING RAIN EVENTS, AND IN PREPARATION FOR SUCH EVENTS, ANY LOOSE SEDIMENTS/SILT OR OTHER MATERIALS SHALL BE COVERED WITH WOVEN FABRIC AND SURROUNDED BY STRAW WATTLES.

SURVEY CONTROL POINTS

SURVEY CONTROL POINTS

Point #	Raw Description	Elevation	Northing	Easting
10673	SET X ON CURB	533.260	1898505.7620	6567558.4350
10674	SET X ON CURB	530.870	1898071.3960	6567371.6200
26	SET PAINT X ON NE CONC	529.150	1898584.3610	6567932.2190
25	SET PAINT X ON NE CONC	532.512	1898383.3720	6567835.2840
24	SET PAINT X ON NE CONC	534.508	1897954.1460	6567560.5240
23	SET PAINT X ON NE COR FIRE VLT	522.387	1896441.0120	6565279.0420
19	SET X TBW	533.212	1898292.7690	6567498.6507
18	SET X TBW	532.396	1898154.1568	6567440.7382
17	SET X ON CURB	530.870	1898071.3956	6567371.6202
16	SET X ON CURB	533.260	1898505.7619	6567558.4349
10684	SET PAINT X ON NE CURB	529.405	1898809.6600	6567112.8210
44	SET PAINT X ON CURB	522.432	1898755.2910	6566038.1830
43	SET PAINT X ON CURB	521.710	1898827.0960	6566120.8740
41	SET X ON CN	527.726	1898623.0440	6566367.3850
40	SET X ON CURB	520.406	1898903.7520	6566216.8840
39	SET X ON WALK	523.797	1898689.9750	6566017.6820
36	SET PAINT X ON CURB	519.273	1898983.3010	6566197.9200
35	SET PAINT X ON CURB	520.878	1898972.0340	6566380.0150
34	SET PAINT X ON CURB	521.442	1899001.1680	6566473.2120
33	SET PAINT X ON CURB	522.018	1899022.4810	6566591.2830
32	SET PAINT X ON CURB	522.753	1899024.6310	6566702.7070
29	SET PAINT X ON CURB	524.020	1899008.4780	6566818.9110
28	SET PAINT X ON CURB	525.873	1898976.1850	6566921.6310
27	SET PAINT X ON NE CURB	529.405	1898809.6600	6567112.8210
42	SET X ON CURB	525.927	1898316.9910	6566278.6860
31	SET PAINT X ON CURB	526.507	1898422.0330	6566550.3220
30	SET PAINT X ON SW	528.070	1898566.5500	6566703.1210

811 Know what's **below.** **Call** before you dig.

REVIEWED FOR DSA EXEMPTION

THE SCOPE OF WORK INVOLVED IN THIS PROJECT IS EXEMPT FROM THE DIVISION OF THE STATE ARCHITECT ACCESSIBILITY REQUIREMENTS IN ACCORDANCE WITH TITLE 24, CALIFORNIA CODE OF REGULATIONS, 2019 CALIFORNIA BUILDING CODE.

OFFICE OF THE STATE FIRE MARSHAL APPROVED FIRE AND PANIC ONLY
Reviewed by: Alvin Wong, Senior Architect
SEP 2 4 2025
Approval of this plan does not authorize or approve any omission or deviation from applicable regulations. Final approval is subject to field inspection. One set of approved plans shall be available on the project site at all times.

GENERAL SERVICES

Department of General Services
Architecture & Engineering Sections
State of California
Real Estate Services Division
Project Management & Development Branch
707 Third Street, Suite 4-105
West Sacramento, California 95605

REGISTERED PROFESSIONAL ENGINEER CHRIS ELLICOCK C 94140 CIVIL STATE OF CALIFORNIA
8/28/25

Issue

No.	Date	Description
1	8/28/25	

Project
STAFF RESIDENCES REHABILITATION
26501 AVENUE 140
PORTERVILLE, CA 93257
PORTERVILLE, CA 93257

DEVELOPMENTAL SERVICES

Supervisor	Designed	Drawn
JD	CE	CE

DSA App No.: N/A
SFM Permit No.: 25-S-3082-C-AC

Sheet Title
CIVIL GENERAL NOTES

Project Number: 000000000006803

Reference North

Sheet Scale: N/A

Sheet Number: C001

Copyright © 2020, California Department of General Services - Real Estate Services Division

CAD File: \\SA01FIL003\AutoCAD\Projects\00xxxx\006803\DWG\PLTC001 CIVIL NOTES AND LEGEND.dwg Plot Date: Sep 02, 2025 - 12:36pm Plotted by: DuNguyen

ISSUE DATE: OCTOBER 28, 2026

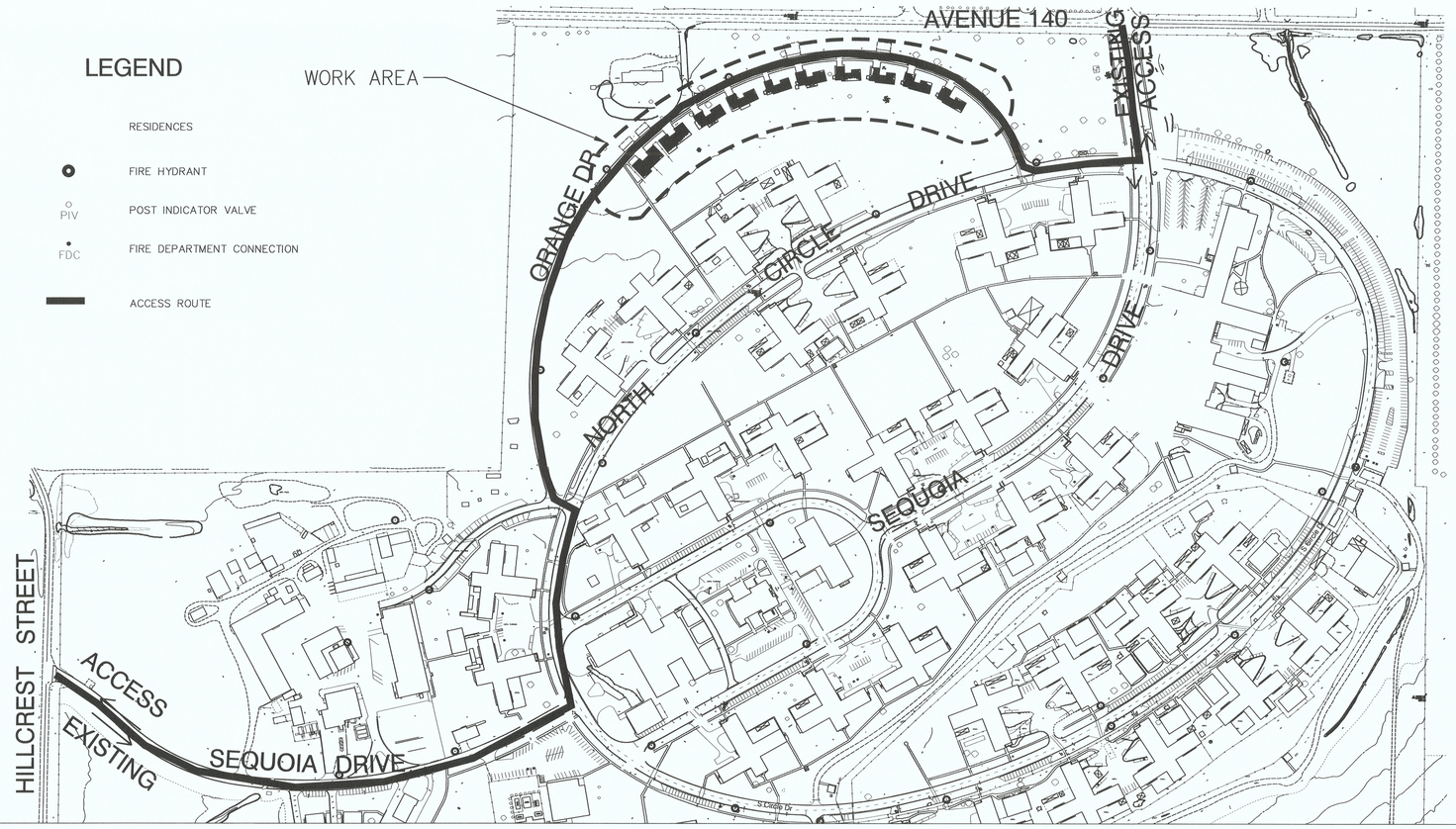

1 FIRE DEPARTMENT ACCESS PLAN — 1" = 100'

STATE OF CALIFORNIA – NATIONAL RESOURCES AGENCY — Gavin Newsom, Governor

DEPARTMENT OF FORESTRY AND FIRE PROTECTION
OFFICE OF THE STATE FIRE MARSHAL
Fire and Life Safety Division
P.O. Box 942246
SACRAMENTO, CA 94244-2460
(916) 568-3947
Website: www.fire.ca.gov

LOCAL FIRE AUTHORITY – ACCESS APPROVAL

Project: Staff Residences Rehabilitation

Address: 26501 Avenue 140, Porterville, Ca 93257

CSFM File Number: _____ (Only if applicable)

DGS Project #: 000000000006803 (Only if applicable)

Pursuant to Title 19, California Code of Regulations, Article 3, Section 3.05, Fire Department Access and Egress, it is necessary to provide the California State Fire Marshal with written certification from the local fire authority that the above section is being met to their satisfaction.

Please return this form with all sections filled in completely. Without this form, California State Fire Marshal approval may be delayed. If you have any questions, please contact the California State Fire Marshal Plan Review Unit at (916) 568-2957.

The local fire authority shall consider the following items,

Approved	Yes	No
Fire Department Access	X	
Fire Department Connection		X
Fire Hydrant	N/A	
Fire Alarm Annunciator		X
Fire Alarm Control Panel		X
Knox Box		N/A
Emergency Responder Radio Coverage	X	

Local Fire Authority: Upper Reclamation Fire Department
Address: 40 W. Cleveland Ave
City/State/ZIP: Porterville, CA 93257

Approval issued by: Clayton Dawson
Rank/Title: Fire Marshal
Phone Number: 559 782 7526
Signature: _____ Date: 8/28/2025

2 LOCAL FIRE AUTHORITY - ACCESS APPROVAL

REVIEWED FOR DSA EXEMPTION
THE SCOPE OF WORK INVOLVED IN THIS PROJECT IS EXEMPT FROM THE DIVISION OF THE STATE ARCHITECT ACCESSIBILITY REQUIREMENTS IN ACCORDANCE WITH TITLE 24, CALIFORNIA CODE OF REGULATIONS, 2019 CALIFORNIA BUILDING CODE.

OFFICE OF THE STATE FIRE MARSHAL
APPROVED FIRE AND PANIC ONLY
Reviewed by: _____ Senior Architect
SEP 24 2025
Approval of this plan does not authorize or approve any omission or deviation from applicable regulations. Final approval is subject to field inspection. One set of approved plans shall be available on the project site at all times.

DGS GENERAL SERVICES
Department of General Services
Architecture & Engineering Sections
State of California
Real Estate Services Division
Project Management & Development Branch
707 Third Street, Suite 4-105
West Sacramento, California 95605

REGISTERED PROFESSIONAL ENGINEER
CHRIS ELLICOCK
C 94140
CIVIL
STATE OF CALIFORNIA
8/28/25

Issue		
No.	Date	Description
1	8/28/25	

Project
STAFF RESIDENCES REHABILITATION
26501 AVENUE 140
PORTERVILLE, CA 93257
PORTERVILLE, CA 93257

DEVELOPMENTAL SERVICES

Supervisor	Designed	Drawn
JD	CE	CE

DSA App No. N/A
SFM Permit No. 25-S-3082-C-AC

Sheet Title
FIRE ACCESS PLAN

Project Number
000000000006803

Reference North
Sheet Scale AS NOTED
Sheet Number C002

Copyright © 2020, California Department of General Services - Real Estate Services Division

ISSUE DATE: OCTOBER 28, 2026

CAD File: I:\SA01\FIL003\Auto\ACAD\Projects\0xxxxx\006803\DWG\PLTC\C002 C002 CIVIL NOTES.dwg Plot Date: Sep 02, 2025 - 12:26pm Plotted by: DuNguyen

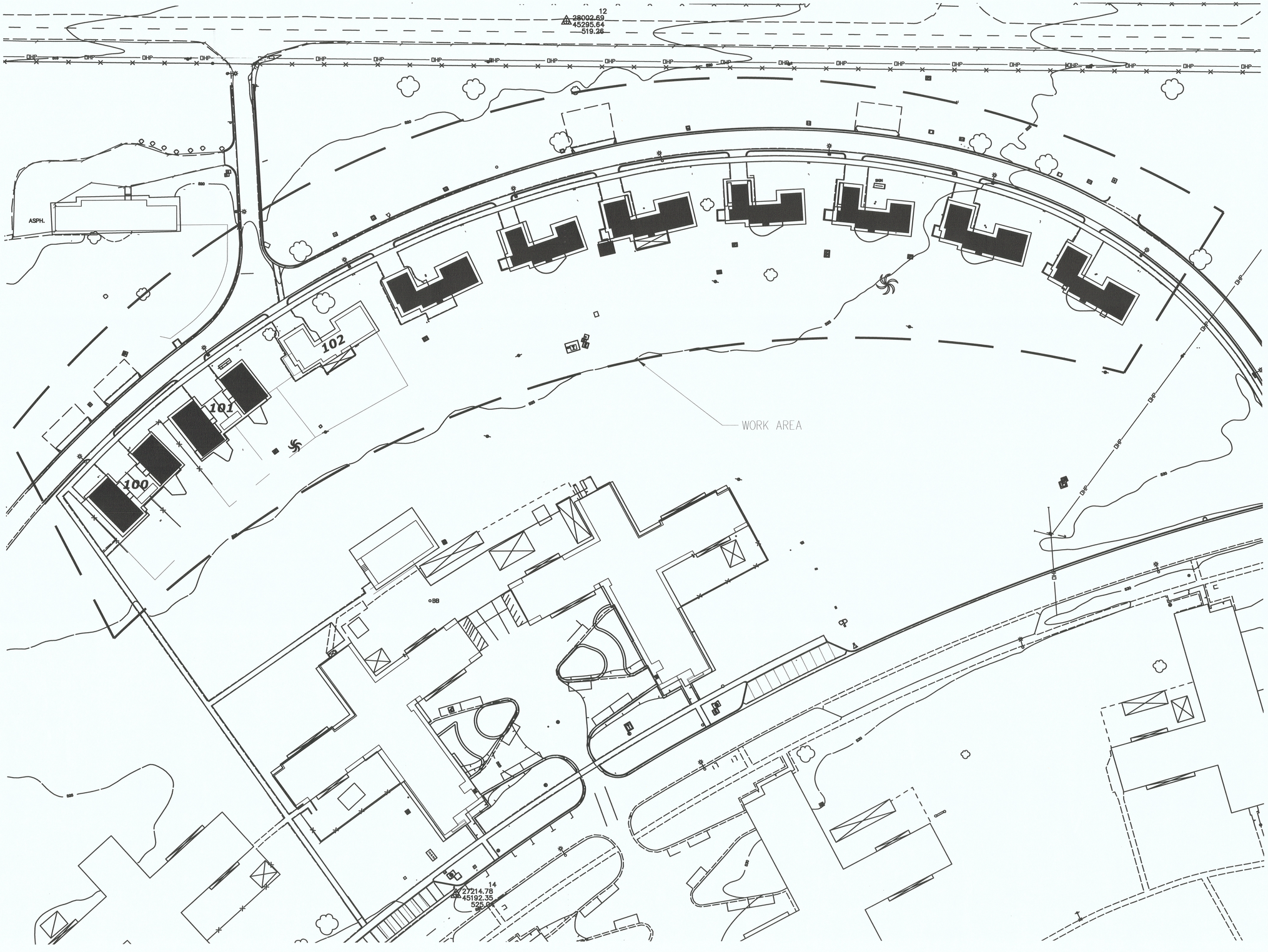

REVIEWED FOR DSA EXEMPTION

THE SCOPE OF WORK INVOLVED IN THIS PROJECT IS EXEMPT FROM THE DIVISION OF THE STATE ARCHITECT ACCESSIBILITY REQUIREMENTS IN ACCORDANCE WITH TITLE 24, CALIFORNIA CODE OF REGULATIONS, 2019 CALIFORNIA BUILDING CODE.

OFFICE OF THE STATE FIRE MARSHAL
APPROVED FIRE AND PANIC ONLY
Reviewed by: _____
Alvin Chang, Senior Architect

SEP 2 4 2025

Approval of this plan does not authorize or approve any omission or deviation from applicable regulations. Final approval is subject to field inspection. One set of approved plans shall be available on the project site at all times.

DGS GENERAL SERVICES

Department of General Services
Architecture & Engineering Sections
State of California
Real Estate Services Division
Project Management & Development Branch

707 Third Street, Suite 4-105
West Sacramento, California 95605

REGISTERED PROFESSIONAL ENGINEER
CHRIS ELLICOCK
C 94140
CIVIL
STATE OF CALIFORNIA

8/28/25

Issue

No.	Date	Description
1	8/28/25	

Project
STAFF RESIDENCES REHABILITATION

26501 AVENUE 140
PORTERVILLE, CA 93257
PORTERVILLE, CA 93257

DEVELOPMENTAL SERVICES

Supervisor	Designed	Drawn
JD	CE	CE

DSA App No.	SFM Permit No.
N/A	25-S-3082-C-AC

Sheet Title
SITE EXISTING CONDITIONS

Project Number
000000000006803

Reference North

Sheet Scale
1"=40'

Sheet Number
C011

ISSUE DATE: OCTOBER 28, 2026

Copyright © 2020, California Department of General Services - Real Estate Services Division

CAD File: \\SAGFILI003\AutoCAD\Projects\00xxxx\006803\DWG\PLTC011 Site Existing Conditions.dwg Plot Date: Sep 02, 2025 - 12:26pm Plotted by: DuNguyen

24 X 36

SITE DEMOLITION KEYNOTES:
APPLICABLE TO SHEETS 022 – 024.
ALL KEYNOTES MAY NOT BE ON EACH SHEET.

(X)

1. SAW CUT VERTICALLY AND REMOVE CONCRETE DRIVEWAY, CURB, AND BASE MATERIAL.
2. PROTECT EXISTING HOUSING UNITS FROM DAMAGE CAUSED BY CONSTRUCTION ACTIVITIES, TYP.
3. PROTECT ADJACENT ACCESS ROADWAYS FROM DAMAGE CAUSED BY CONSTRUCTION ACTIVITIES.
4. REMOVE SHED AND FOUNDATION.
5. REMOVE WOOD FENCE AND GATES.
6. PROTECT IN PLACE CHAIN LINK AND PRIVACY SLATS FROM DAMAGE CAUSED BY CONSTRUCTION ACTIVITIES.
7. REMOVE LANDSCAPING AND SHRUBS.
8. REMOVE CURB AND GUTTER.
9. REMOVE SIGN AND FOOTING

GENERAL SITE DEMOLITION NOTES:

1. SEE PARTIAL UTILITY PLANS FOR UTILITY LINE REMOVALS AND REPLACEMENTS.

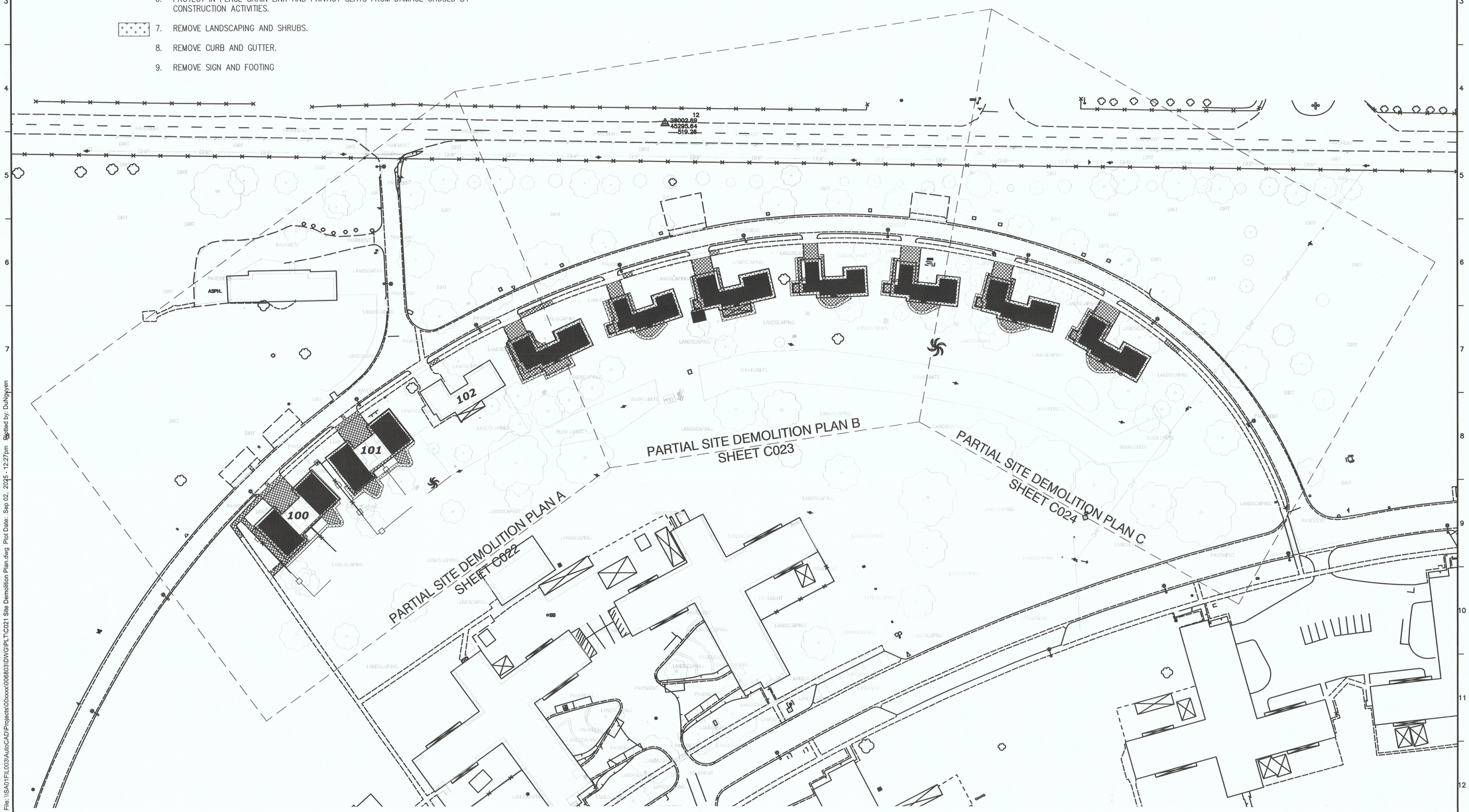

REVIEWED FOR DSA EXEMPTION
THE SCOPE OF WORK INVOLVED IN THIS PROJECT IS EXEMPT FROM THE DIVISION OF THE STATE ARCHITECT ACCESSIBILITY REQUIREMENTS IN ACCORDANCE WITH TITLE 24, CALIFORNIA CODE OF REGULATIONS, 2019 CALIFORNIA BUILDING CODE.

OFFICE OF THE STATE FIRE MARSHAL
APPROVED FIRE AND PANIC ONLY
Reviewed by: Alvin Wang, Senior Architect
SEP 24 2025
Approval of this plan does not authorize or approve any omission or deviation from applicable regulations. Final approval is subject to field inspection. One set of approved plans shall be available on the project site at all times.

DGS GENERAL SERVICES
Department of General Services
Architecture & Engineering Sections
State of California
Real Estate Services Division
Project Management & Development Branch
707 Third Street, Suite 4-105
West Sacramento, California 95605

REGISTERED PROFESSIONAL ENGINEER
CHRIS ELLICOCK
C 94140
CIVIL
STATE OF CALIFORNIA
8/28/25

Issue		
No.	Date	Description
1	8/28/25	

Project
STAFF RESIDENCES REHABILITATION
26501 AVENUE 140
PORTERVILLE, CA 93257
PORTERVILLE, CA 93257

DEVELOPMENTAL SERVICES

Supervisor	Designed	Drawn
JD	CE	CE

DSA App No.	SFM Permit No.
N/A	25-S-3082-C-AC

Sheet Title
SITE DEMOLITION PLAN KEY MAP

Project Number
000000000006803

Reference North

Sheet Scale
1"=50'

Sheet Number
C021

ISSUE DATE: OCTOBER 28, 2026

Copyright © 2020, California Department of General Services - Real Estate Services Division

CAD File: \\SAG1FIL003\Auto CAD\Projects\00xxxx\006803\DWG\PLTC021 Site Demolition Plan.dwg Plot Date: Sep 02, 2025 - 12:27pm Plotted by: DuNguyen



REVIEWED FOR DSA EXEMPTION

THE SCOPE OF WORK INVOLVED IN THIS PROJECT IS EXEMPT FROM THE DIVISION OF THE STATE ARCHITECT ACCESSIBILITY REQUIREMENTS IN ACCORDANCE WITH TITLE 24, CALIFORNIA CODE OF REGULATIONS, 2019 CALIFORNIA BUILDING CODE.

OFFICE OF THE STATE FIRE MARSHAL
APPROVED FIRE AND PANIC ONLY
Reviewed by _____
Alvin Cheng, Senior Architect

SEP 2 4 2025

Approval of this plan does not authorize or approve any omission or deviation from applicable regulations. Final approval is subject to field inspection. One set of approved plans shall be available on the project site at all times

GENERAL SERVICES

Department of General Services
Architecture & Engineering Sections
State of California
Real Estate Services Division
Project Management & Development Branch

707 Third Street, Suite 4-105
West Sacramento, California 95605

REGISTERED PROFESSIONAL ENGINEER
CHRIS ELLICOCK
C 94140
CIVIL
STATE OF CALIFORNIA

8/28/25

Issue		
No.	Date	Description
1	8/28/25	

Project
STAFF RESIDENCES REHABILITATION

26501 AVENUE 140
PORTERVILLE, CA 93257
PORTERVILLE, CA 93257

DEVELOPMENTAL SERVICES

Supervisor	Designed	Drawn
JD	CE	CE

DSA App No.	SFM Permit No.
N/A	25-S-3082-C-AC

Sheet Title
PARTIAL SITE DEMOLITION PLAN A

Project Number
000000000006803

Reference North

Sheet Scale
1"=20'

Sheet Number
C022

ISSUE DATE: OCTOBER 28, 2026

Copyright © 2020, California Department of General Services - Real Estate Services Division

CAD File: \\SAO1FIL003\AutoCAD\Projects\00xxxx\006803\DWG\PLTC022.dwg Plot Date: Sep 02, 2025 - 12:27pm Plotted by: DuNguyen

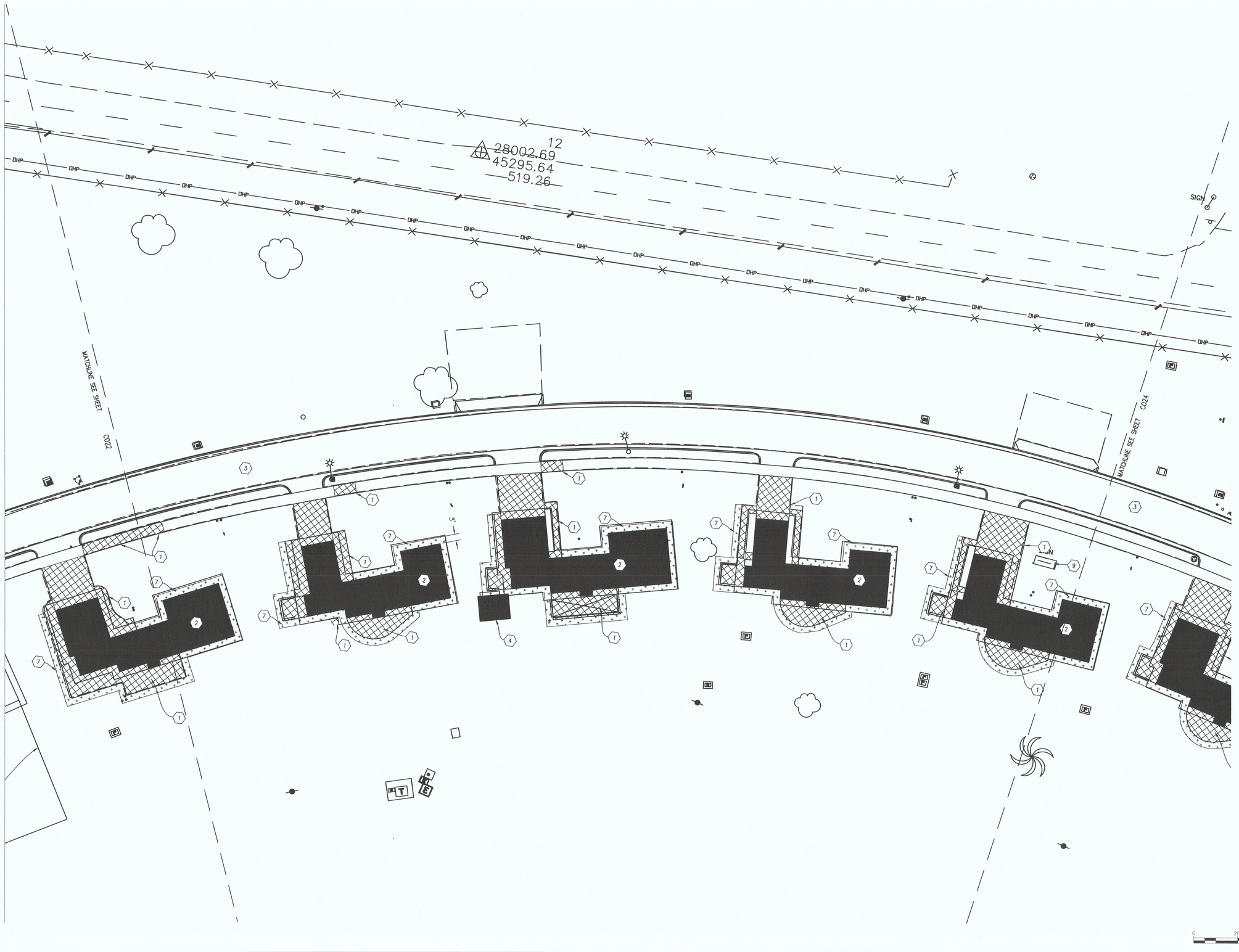

REVIEWED FOR DSA EXEMPTION

THE SCOPE OF WORK INVOLVED IN THIS PROJECT IS EXEMPT FROM THE DIVISION OF THE STATE ARCHITECT ACCESSIBILITY REQUIREMENTS IN ACCORDANCE WITH TITLE 24, CALIFORNIA CODE OF REGULATIONS, 2019 CALIFORNIA BUILDING CODE.

OFFICE OF THE STATE FIRE MARSHAL
APPROVED FIRE AND PANIC ONLY
Reviewed by: Alvin Kong, Senior Architect

SEP 2 4 2025

Approval of this plan does not authorize or approve any omission or deviation from applicable regulations. Final approval is subject to field inspection. One set of approved plans shall be available on the project site at all times

GENERAL SERVICES

Department of General Services
Architecture & Engineering Sections
State of California
Real Estate Services Division
Project Management & Development Branch

707 Third Street, Suite 4-105
West Sacramento, California 95605

REGISTERED PROFESSIONAL ENGINEER
CHRIS ELLICOCK
C 94140
CIVIL
STATE OF CALIFORNIA

8/28/25

Issue No.	Date	Description
1	8/28/25	

Project
STAFF RESIDENCES REHABILITATION

26501 AVENUE 140
PORTERVILLE, CA 93257
PORTERVILLE, CA 93257

DEVELOPMENTAL SERVICES

Supervisor	Designed	Drawn
JD	CE	CE

DSA App No. N/A
SFM Permit No. 25-S-3082-C-AC

Sheet Title
PARTIAL SITE DEMOLITION PLAN B

Project Number 000000000006803

Reference North

Sheet Scale 1"=20'

Sheet Number C023

Copyright © 2020, California Department of General Services - Real Estate Services Division

ISSUE DATE: OCTOBER 28, 2026

CAD File: \\SAD1FIL003\AutoCAD\Projects\00xxxx\006803\DWG\PLT\C023.dwg Plot Date: Sep 02, 2025 - 12:27pm Plotted by: DuNguyen

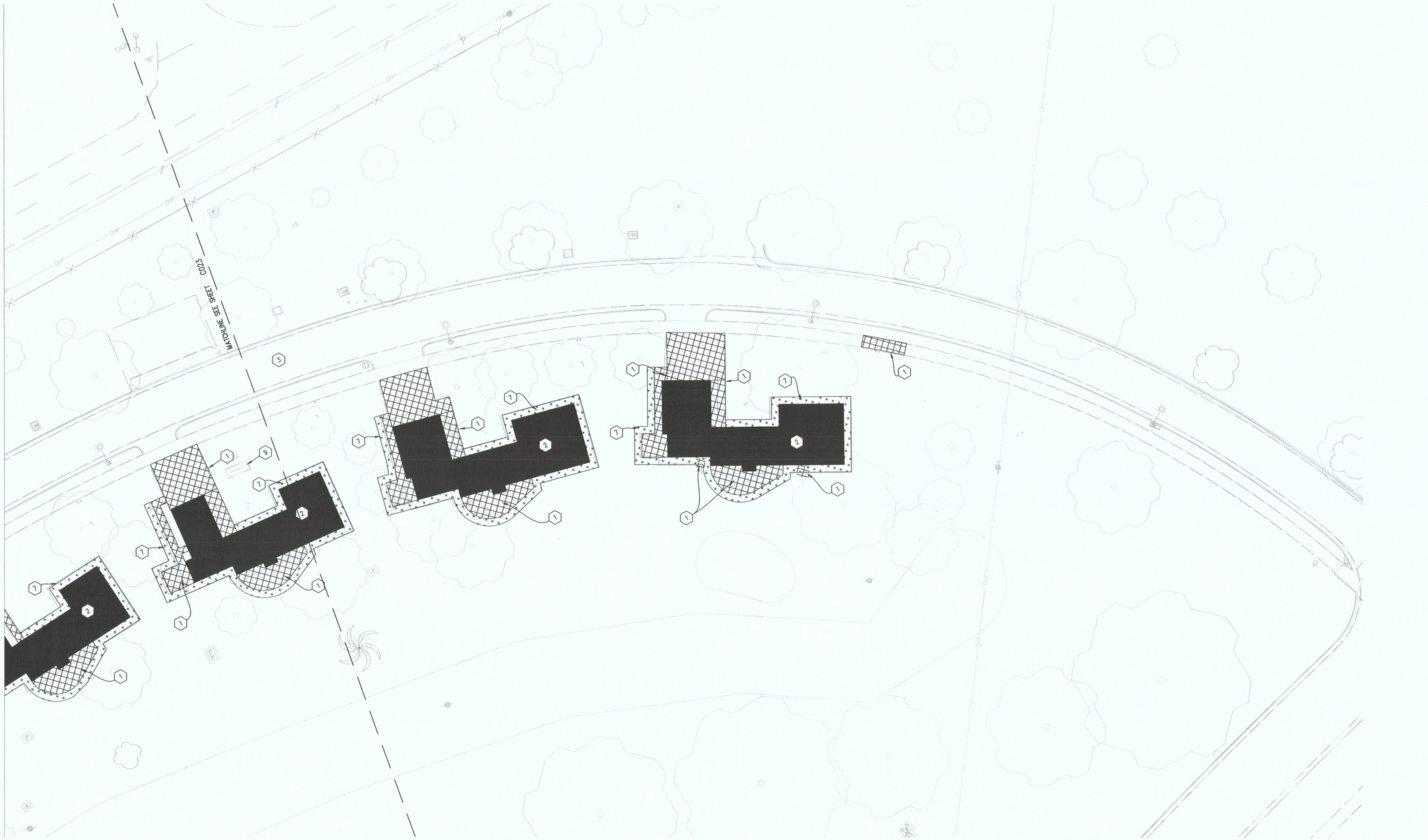

REVIEWED FOR DSA EXEMPTION

THE SCOPE OF WORK INVOLVED IN THIS PROJECT IS EXEMPT FROM THE DIVISION OF THE STATE ARCHITECT ACCESSIBILITY REQUIREMENTS IN ACCORDANCE WITH TITLE 24, CALIFORNIA CODE OF REGULATIONS, 2019 CALIFORNIA BUILDING CODE.

OFFICE OF THE STATE FIRE MARSHAL
APPROVED FIRE AND PANIC ONLY
Reviewed by: _____
Alvin Wang, Senior Architect

SEP 2 4 2025

Approval of this plan does not authorize or approve any omission or deviation from applicable regulations. Final approval is subject to field inspection. One set of approved plans shall be available on the project site at all times

DGS GENERAL SERVICES

Department of General Services
Architecture & Engineering Sections
State of California
Real Estate Services Division
Project Management & Development Branch

707 Third Street, Suite 4-105
West Sacramento, California 95605

REGISTERED PROFESSIONAL ENGINEER
CHRIS ELLICOCK
C 94140
CIVIL
STATE OF CALIFORNIA

8/28/25

Issue

No.	Date	Description
1	8/28/25	

Project

STAFF RESIDENCES REHABILITATION

26501 AVENUE 140
PORTERVILLE, CA 93257
PORTERVILLE, CA 93257

DEVELOPMENTAL SERVICES

Supervisor	Designed	Drawn
JD	CE	CE

DSA App No.	SFM Permit No.
N/A	25-S-3082-C-AC

Sheet Title

PARTIAL SITE DEMOLITION PLAN C

Project Number
000000000006803

Reference North

Sheet Scale
1"=20'

Sheet Number
C024

Copyright © 2020, California Department of General Services - Real Estate Services Division

ISSUE DATE: OCTOBER 28, 2026

CAD File: \\SAO1FIL003\AutoCAD\Projects\00xxxx\006803\DWG\PLTC024.dwg Plot Date: Sep 02, 2025 - 12:27pm Plotted by: DuNguyen

GENERAL NOTES:

1. PROTECT ALL (E) FEATURES NOT PART OF THIS PROJECT.
2. CONTRACTOR SHALL EMPLOY TRAFFIC CONTROL MEASURES AS REQUIRED AND IN COORDINATION WITH DDS PORTERVILLE PLANT OPS PERSONNEL.
3. REPLACE GRASS DISTURBED BY CONSTRUCTION WITH SOD SUITED FOR THE AREA, COORDINATE WITH FACILITY LANDSCAPING PERSONNEL
4. IRRIGATION WILL NEED TO BE RELOCATED. FIELD VERIFY AND COORDINATE WITH FACILITY LANDSCAPING PERSONNEL.
5. PLANT SHRUBS TO REPLACE EXISTING SHRUBS REMOVED FOR DRAINAGE IN KIND.

(#) SITE PLAN KEYNOTES:

APPLICABLE TO SHEETS 102 – 104.
ALL KEYNOTES MAY NOT BE ON EACH SHEET.

1. PROVIDE 4" PCC OVER 4"AB FOR WALKWAYS, CONSTRUCTION EXPANSION JOINT BETWEEN NEW CONCRETE AND BUILDING FOUNDATION. SEE DETAIL 3/C501 & 1D/C501.
2. PROVIDE 6" PCC OVER 6"AB FOR DRIVEWAYS, CONSTRUCTION EXPANSION JOINT BETWEEN NEW AND EXISTING CONCRETE SEE DETAIL 2/C501 & 1D/C501.
3. PERIMETER DRAIN, SEE DETAIL 5/C501.
4. CURB PENETRATION CONNECTED VIA SOLID 4" DRAIN PIPE TO PERIMETER DRAIN SYSTEM. 6" MIN COVER OVER SOLID DRAIN PIPE. SEE DETAIL 7/C501.
5. SAWCUT TRENCH SECTION THROUGH DRIVEWAY RAMP AND STREET FOR SS LATERAL REPLACEMENT. SEE SHEET C401 PARTIAL SITE/UTILITY PLAN A AND DETAIL 6/C501. REPLACE CONCRETE CURB AND GUTTER SEE DETAIL 8/C501.
6. 6' HIGH WOOD FENCE MATCH EXISTING IN KIND ALONG EXISTING ALIGNMENTS, PRESSURE TREATED STRINGERS & POSTS. POSTS SET IN CONCRETE 2' DEEP. REPLACE FENCE GATE WHERE EXISTING GATE OCCURS 5' WIDE 6' HEIGHT. MATCH EXISTING FENCE BOARD WIDTH AND PATTERN. REDWOOD FENCE BOARDS.



REVIEWED FOR DSA EXEMPTION

THE SCOPE OF WORK INVOLVED IN THIS PROJECT IS EXEMPT FROM THE DIVISION OF THE STATE ARCHITECT ACCESSIBILITY REQUIREMENTS IN ACCORDANCE WITH TITLE 24, CALIFORNIA CODE OF REGULATIONS, 2019 CALIFORNIA BUILDING CODE.

OFFICE OF THE STATE FIRE MARSHAL
APPROVED FIRE AND PANIC ONLY
Reviewed by: AW
Alvin Wong, Senior Architect

SEP 2 4 2025

Approval of this plan does not authorize or approve any omission or deviation from applicable regulations. Final approval is subject to field inspection. One set of approved plans shall be available on the project site at all times.

GENERAL SERVICES

Department of General Services
Architecture & Engineering Sections
State of California
Real Estate Services Division
Project Management & Development Branch

707 Third Street, Suite 4-105
West Sacramento, California 95605

REGISTERED PROFESSIONAL ENGINEER
CHRIS ELLICOCK
C 94140
CIVIL
STATE OF CALIFORNIA

8/28/25

Issue		
No.	Date	Description
1	8/28/25	

Project
STAFF RESIDENCES REHABILITATION

26501 AVENUE 140
PORTERVILLE, CA 93257
PORTERVILLE, CA 93257

DEVELOPMENTAL SERVICES

Supervisor	Designed	Drawn
JD	CE	CE

DSA App No.	SFM Permit No.
N/A	25-S-3082-C-A C

Sheet Title
SITE IMPROVEMENTS PLAN KEY MAP

Project Number
000000000006803

Reference North

Sheet Scale
1"=50'

Sheet Number
C101

Copyright © 2020, California Department of General Services - Real Estate Services Division

ISSUE DATE: OCTOBER 28, 2026

CAD File: \\SA01FIL003\AutoCAD\Projects\00xxxx\006803\DWG\PLTC101 Site Plan Overall.dwg Plot Date: Sep 02, 2025 - 12:27pm Plotted by: DuNguyen



REVIEWED FOR DSA EXEMPTION

THE SCOPE OF WORK INVOLVED IN THIS PROJECT IS EXEMPT FROM THE DIVISION OF THE STATE ARCHITECT ACCESSIBILITY REQUIREMENTS IN ACCORDANCE WITH TITLE 24, CALIFORNIA CODE OF REGULATIONS, 2019 CALIFORNIA BUILDING CODE.

OFFICE OF THE STATE FIRE MARSHAL
APPROVED FIRE AND PANIC ONLY
Reviewed by: _____
Alvin Cheng, Senior Architect

SEP 2 4 2025

Approval of this plan does not authorize or approve any omission or deviation from applicable regulations. Final approval is subject to field inspection. One set of approved plans shall be available on the project site at all times.

DGS GENERAL SERVICES

Department of General Services
Architecture & Engineering Sections
State of California
Real Estate Services Division
Project Management & Development Branch

707 Third Street, Suite 4-105
West Sacramento, California 95605

REGISTERED PROFESSIONAL ENGINEER
CHRIS ELLICOCK
C 94140
CIVIL
STATE OF CALIFORNIA

8/28/25

Issue No.	Date	Description
1	8/28/25	

Project
STAFF RESIDENCES REHABILITATION

26501 AVENUE 140
PORTERVILLE, CA 93257
PORTERVILLE, CA 93257

DEVELOPMENTAL SERVICES

Supervisor	Designed	Drawn
JD	CE	CE

DSA App No.	SFM Permit No.
N/A	25-S-3082-C-AC

Sheet Title
PARTIAL SITE IMPROVEMENTS PLAN A

Project Number
000000000006803

Reference North

Sheet Scale
1"=20'

Sheet Number
C102

Copyright © 2020, California Department of General Services - Real Estate Services Division

ISSUE DATE: OCTOBER 28, 2026

CAD File: \\SA01FIL003\AutoCAD\Projects\00xxxx\006803\DWG\PLTC102.dwg Plot Date: Sep 02, 2025 - 12:29pm Plotted by: DuNguyen

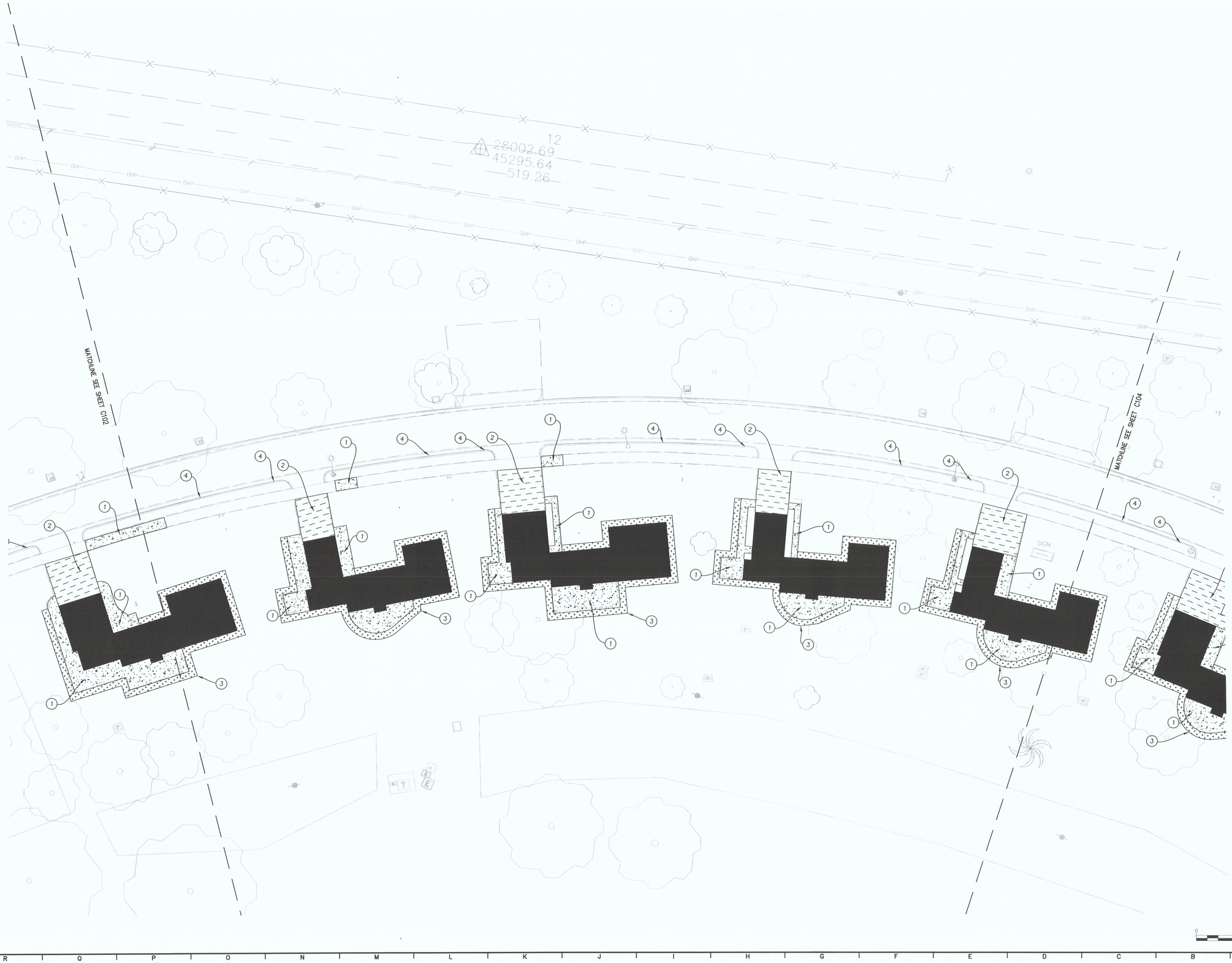

REVIEWED FOR DSA EXEMPTION

THE SCOPE OF WORK INVOLVED IN THIS PROJECT IS EXEMPT FROM THE DIVISION OF THE STATE ARCHITECT ACCESSIBILITY REQUIREMENTS IN ACCORDANCE WITH TITLE 24, CALIFORNIA CODE OF REGULATIONS, 2019 CALIFORNIA BUILDING CODE.

OFFICE OF THE STATE FIRE MARSHAL
APPROVED FIRE AND PANIC ONLY
Reviewed by: _____
Alvin Wong, Senior Architect

SEP 24 2025

Approval of this plan does not authorize or approve any omission or deviation from applicable regulations. Final approval is subject to field inspection. One set of approved plans shall be available on the project site at all times.

GENERAL SERVICES

Department of General Services
Architecture & Engineering Sections
State of California
Real Estate Services Division
Project Management & Development Branch

707 Third Street, Suite 4-105
West Sacramento, California 95605

REGISTERED PROFESSIONAL ENGINEER
CHRIS ELLICOCK
C 94140
CIVIL
STATE OF CALIFORNIA

8/28/25

Issue		
No.	Date	Description
1	8/28/25	

Project
STAFF RESIDENCES REHABILITATION

26501 AVENUE 140
PORTERVILLE, CA 93257
PORTERVILLE, CA 93257

DEVELOPMENTAL SERVICES

Supervisor	Designed	Drawn
JD	CE	CE

DSA App No.	SFM Permit No.
N/A	25-S-3082-C- AC

Sheet Title
PARTIAL SITE IMPROVEMENTS PLAN B

Project Number
000000000006803

Reference North

Sheet Scale
1"=20'

Sheet Number
C103

Copyright © 2020, California Department of General Services - Real Estate Services Division

ISSUE DATE: OCTOBER 28, 2026

CAD File: \\SA01FIL003\AutoCAD\Projects\000xxxx\0068093\DWG\PLTC103.dwg Plot Date: Sep 02, 2025 - 12:28pm Plotted by: DuNguyen



REVIEWED FOR DSA EXEMPTION

THE SCOPE OF WORK INVOLVED IN THIS PROJECT IS EXEMPT FROM THE DIVISION OF THE STATE ARCHITECT ACCESSIBILITY REQUIREMENTS IN ACCORDANCE WITH TITLE 24, CALIFORNIA CODE OF REGULATIONS, 2019 CALIFORNIA BUILDING CODE.

OFFICE OF THE STATE FIRE MARSHAL
APPROVED FIRE AND PANIC ONLY
Reviewed by: Alvin Wells, Senior Architect

SEP 24 2025

Approval of this plan does not authorize or approve any omission or deviation from applicable regulations. Final approval is subject to field inspection. One set of approved plans shall be available on the project site at all times

DGS GENERAL SERVICES

Department of General Services
Architecture & Engineering Sections
State of California
Real Estate Services Division
Project Management & Development Branch

707 Third Street, Suite 4-105
West Sacramento, California 95605

REGISTERED PROFESSIONAL ENGINEER
CHRIS ELLICOCK
C 94140
CIVIL
STATE OF CALIFORNIA

8/28/25

Issue No.	Date	Description
1	8/28/25	

Project
STAFF RESIDENCES REHABILITATION

26501 AVENUE 140
PORTERVILLE, CA 93257
PORTERVILLE, CA 93257

DEVELOPMENTAL SERVICES

Supervisor	Designed	Drawn
JD	CE	CE

DSA App No.	SFM Permit No.
N/A	25-S-3082-C-AC

Sheet Title
PARTIAL SITE IMPROVEMENT PLAN C

Project Number
000000000006803

Reference North

Sheet Scale
1"=20'

Sheet Number
C104

Copyright © 2020, California Department of General Services - Real Estate Services Division

ISSUE DATE: OCTOBER 28, 2026

CAD File: ISA01FIL003\AutoCAD\Projects\000xxxx\000803\DWG\PLTC104.dwg Plot Date: Sep 02, 2025 - 12:28pm Plotted by: DuNguyen



REVIEWED FOR DSA EXEMPTION

THE SCOPE OF WORK INVOLVED IN THIS PROJECT IS EXEMPT FROM THE DIVISION OF THE STATE ARCHITECT ACCESSIBILITY REQUIREMENTS IN ACCORDANCE WITH TITLE 24, CALIFORNIA CODE OF REGULATIONS, 2019 CALIFORNIA BUILDING CODE.

OFFICE OF THE STATE FIRE MARSHAL
APPROVED FIRE AND PANIC ONLY
Reviewed by: _____
Alvin Wong, Senior Architect

SEP 24 2025

Approval of this plan does not authorize or approve any omission or deviation from applicable regulations. Final approval is subject to field inspection. One set of approved plans shall be available on the project site at all times.

DGS GENERAL SERVICES

Department of General Services
Architecture & Engineering Sections
State of California
Real Estate Services Division
Project Management & Development Branch

707 Third Street, Suite 4-105
West Sacramento, California 95605

REGISTERED PROFESSIONAL ENGINEER
CHRIS ELLICOCK
C 94140
CIVIL
STATE OF CALIFORNIA

8/28/25

Issue		
No.	Date	Description
1	8/28/25	

Project
STAFF RESIDENCES REHABILITATION

26501 AVENUE 140
PORTERVILLE, CA 93257
PORTERVILLE, CA 93257

DEVELOPMENTAL SERVICES

Supervisor	Designed	Drawn
JD	CE	CE

DSA App No.	SFM Permit No.
N/A	25-S-3082-C-AC

Sheet Title
SITE LAYOUT PLAN KEY MAP

Project Number
000000000006803

Reference North	Sheet Scale
N	1"=50'
	Sheet Number C201

ISSUE DATE: OCTOBER 28, 2026

Copyright © 2020, California Department of General Services - Real Estate Services Division

CAD File: \\SA01FIL003\AutoCAD\Projects\00xxxx\006803\DWG\PLT\C201 Site Layout.dwg Plot Date: Sep 02, 2025 - 12:28pm Plotted by: DuNguyen



REVIEWED FOR DSA EXEMPTION

THE SCOPE OF WORK INVOLVED IN THIS PROJECT IS EXEMPT FROM THE DIVISION OF THE STATE ARCHITECT ACCESSIBILITY REQUIREMENTS IN ACCORDANCE WITH TITLE 24, CALIFORNIA CODE OF REGULATIONS, 2019 CALIFORNIA BUILDING CODE.

OFFICE OF THE STATE FIRE MARSHAL
APPROVED FIRE AND PANIC ONLY
Reviewed by: _____
Alan Wong, Senior Architect

SEP 2 4 2025

Approval of this plan does not authorize or approve any omission or deviation from applicable regulations. Final approval is subject to field inspection. One set of approved plans shall be available on the project site at all times.

GENERAL SERVICES

Department of General Services
Architecture & Engineering Sections
State of California
Real Estate Services Division
Project Management & Development Branch

707 Third Street, Suite 4-105
West Sacramento, California 95605

REGISTERED PROFESSIONAL ENGINEER
CHRIS ELLICOCK
C 94140
CIVIL
STATE OF CALIFORNIA

8/28/25

Issue		
No.	Date	Description
1	8/28/25	

Project
STAFF RESIDENCES REHABILITATION

26501 AVENUE 140
PORTERVILLE, CA 93257
PORTERVILLE, CA 93257

DEVELOPMENTAL SERVICES

Supervisor	Designed	Drawn
JD	CE	CE

DSA App No.	SFM Permit No.
N/A	25-S-3082-C-AC

Sheet Title
PARTIAL SITE LAYOUT PLAN A

Project Number
000000000006803

Reference North

Sheet Scale
1"=20'

Sheet Number
C202

Copyright © 2020, California Department of General Services - Real Estate Services Division

ISSUE DATE: OCTOBER 28, 2026

CAD File: \\SA01FIL003\AutoCAD\Projects\000xxxx\0068093\DWG\PLTC202.dwg Plot Date: Sep 02, 2025 - 12:28pm Plotted by: DuNguyen

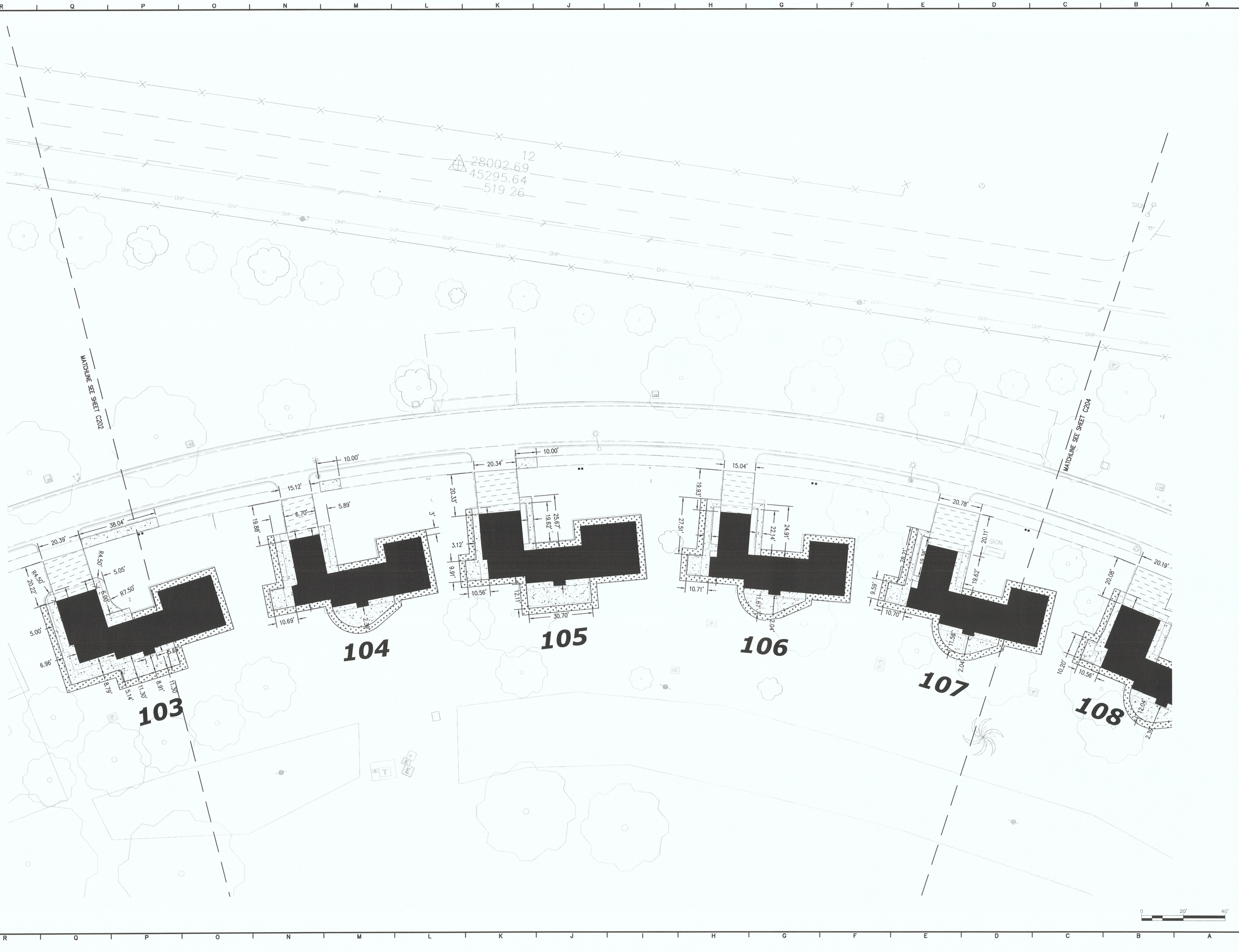

CAD File: I:\SA01\FIL003\AutoCAD\Projects\00xxxx\008803\DWG\PLTC203.dwg Plot Date: Sep 02, 2025 - 12:59pm Plotted by: DuNguyen

REVIEWED FOR DSA EXEMPTION

THE SCOPE OF WORK INVOLVED IN THIS PROJECT IS EXEMPT FROM THE DIVISION OF THE STATE ARCHITECT ACCESSIBILITY REQUIREMENTS IN ACCORDANCE WITH TITLE 24, CALIFORNIA CODE OF REGULATIONS, 2019 CALIFORNIA BUILDING CODE.

OFFICE OF THE STATE FIRE MARSHAL
APPROVED FOR EXIT AND PANIC ONLY
Reviewed by: _____
Allan Wong, Senior Architect

SEP 2 4 2025

Approval of this plan does not authorize or approve any omission or deviation from applicable regulations. Final approval is subject to field inspection. One set of approved plans shall be available on the project site at all times.

GENERAL SERVICES

Department of General Services
Architecture & Engineering Sections
State of California
Real Estate Services Division
Project Management & Development Branch
707 Third Street, Suite 4-105
West Sacramento, California 95605

REGISTERED PROFESSIONAL ENGINEER
CHRIS ELLICOCK
C 94140
CIVIL
STATE OF CALIFORNIA

8/28/25

Issue No.	Date	Description
1	8/28/25	

Project
STAFF RESIDENCES REHABILITATION

26501 AVENUE 140
PORTERVILLE, CA 93257
PORTERVILLE, CA 93257

DEVELOPMENTAL SERVICES

Supervisor	Designed	Drawn
JD	CE	CE

DSA App No.	SFM Permit No.
N/A	25-S-3082-C-AC

Sheet Title
PARTIAL SITE LAYOUT PLAN B

Project Number
000000000006803

Reference North

Sheet Scale
1"=20'

Sheet Number
C203

Copyright © 2020, California Department of General Services - Real Estate Services Division

ISSUE DATE: OCTOBER 28, 2026



REVIEWED FOR DSA EXEMPTION

THE SCOPE OF WORK INVOLVED IN THIS PROJECT IS EXEMPT FROM THE DIVISION OF THE STATE ARCHITECT ACCESSIBILITY REQUIREMENTS IN ACCORDANCE WITH TITLE 24, CALIFORNIA CODE OF REGULATIONS, 2019 CALIFORNIA BUILDING CODE.

OFFICE OF THE STATE FIRE MARSHAL
APPROVED FIRE AND PANIC ONLY
Reviewed by _____
Alvin Ming, Senior Architect

SEP 2 4 2025

Approval of this plan does not authorize or approve any omission or deviation from applicable regulations. Final approval is subject to field inspection. One set of approved plans shall be available on the project site at all times.

DGS GENERAL SERVICES

Department of General Services
Architecture & Engineering Sections
State of California
Real Estate Services Division
Project Management & Development Branch

707 Third Street, Suite 4-105
West Sacramento, California 95605

REGISTERED PROFESSIONAL ENGINEER
CHRIS ELLICOCK
C 94140
CIVIL
STATE OF CALIFORNIA

8/28/25

Issue		
No.	Date	Description
1	8/28/25	

Project
STAFF RESIDENCES REHABILITATION

26501 AVENUE 140
PORTERVILLE, CA 93257
PORTERVILLE, CA 93257

DEVELOPMENTAL SERVICES

Supervisor	Designed	Drawn
JD	CE	CE

DSA App No.	SFM Permit No.
N/A	25-S-3082-C-AC

Sheet Title
PARTIAL SITE LAYOUT PLAN C

Project Number
000000000006803

Reference North

Sheet Scale
1"=20'

Sheet Number
C204

Copyright © 2020, California Department of General Services - Real Estate Services Division

ISSUE DATE: OCTOBER 28, 2026

CAD File: I:\SA01\FIL003\AutoCAD\Projects\000xxxx\000803\DWG\PLTC204.dwg Plot Date: Sep 02, 2025 - 12:29pm Plotted by: DuNguyen

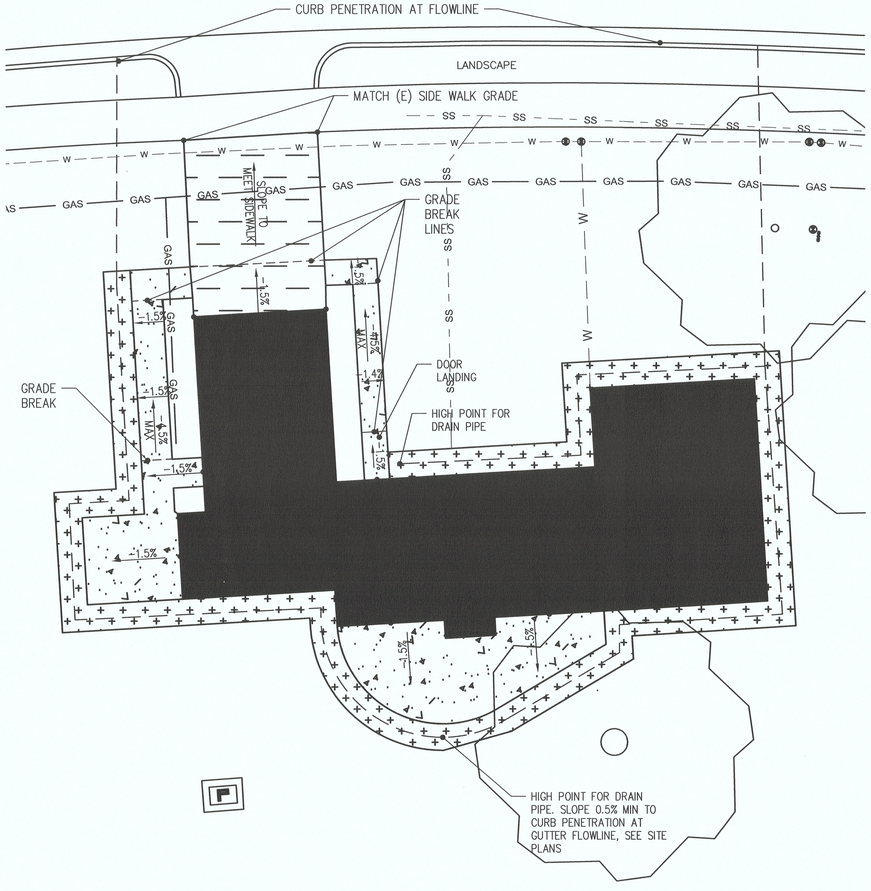

2 TYPICAL GRADING PLAN FOR 2 AND 3 BEDROOM RESIDENCE 1" = 8'

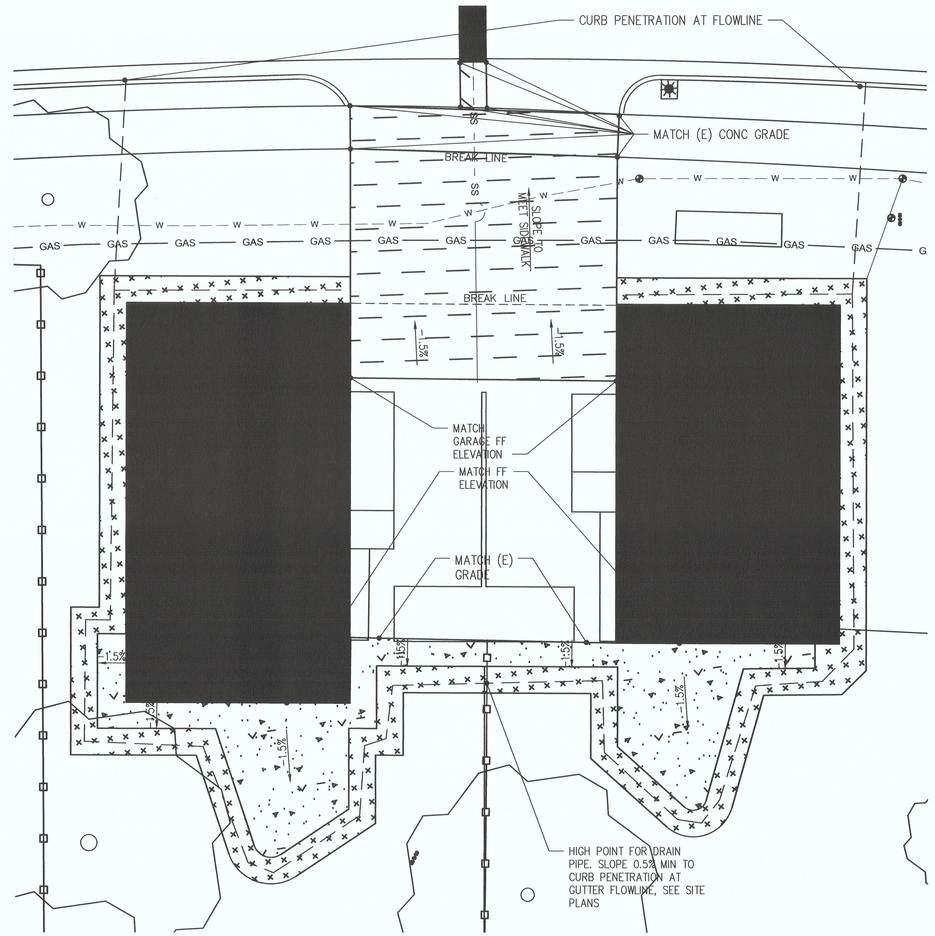

1 TYPICAL GRADING PLAN FOR DUPLEX 1" = 8'

NOTE:
1. SLOPES WITHIN PATIO AREAS SHALL NOT EXCEED 2.0% IN ANY DIRECTION.
2. CROSS SLOPES ALONG WALKWAYS SHALL NOT EXCEED 2.0% AND RUNNING SLOPES SHALL NOT EXCEED 4.5%.
3. CONTRACTOR SHALL NOTIFY THE STATE IF AN EXCEEDANCE/ISSUE OCCURS IN THE FORM WORK.

REVIEWED FOR DSA EXEMPTION

THE SCOPE OF WORK INVOLVED IN THIS PROJECT IS EXEMPT FROM THE DIVISION OF THE STATE ARCHITECT ACCESSIBILITY REQUIREMENTS IN ACCORDANCE WITH TITLE 24, CALIFORNIA CODE OF REGULATIONS, 2019 CALIFORNIA BUILDING CODE.

OFFICE OF THE STATE FIRE MARSHAL
APPROVED FIRE AND PANIC ONLY
Reviewed by: _____
Arel Vann, Senior Architect

SEP 2 4 2025

Approval of this plan does not authorize or approve any omission or deviation from applicable regulations. Final approval is subject to field inspection. One set of approved plans shall be available on the project site at all times.

DGS GENERAL SERVICES
Department of General Services
Architecture & Engineering Sections
State of California
Real Estate Services Division
Project Management & Development Branch
707 Third Street, Suite 4-105
West Sacramento, California 95605

REGISTERED PROFESSIONAL ENGINEER
CHRIS ELLICOCK
C 94140
CIVIL
STATE OF CALIFORNIA
8/28/25

Issue No.	Date	Description
1	8/28/25	

Project
STAFF RESIDENCES REHABILITATION

26501 AVENUE 140
PORTERVILLE, CA 93257
PORTERVILLE, CA 93257

DEVELOPMENTAL SERVICES

Supervisor	Designed	Drawn
JD	CE	CE

DSA App No.	SFM Permit No.
N/A	25-S-3082-C-AC

Sheet Title
TYPICAL GRADING PLAN

Project Number
0000000000006803

Reference North

Sheet Scale
AS NOTED

Sheet Number
C301

ISSUE DATE: OCTOBER 28, 2026

Copyright © 2020, California Department of General Services - Real Estate Services Division

CAD File: \\SA01FIL003\AutoCAD\Projects\00xxxx\006803\DWG\PLTC301 Typical Grading Plan.dwg Plot Date: Sep 02, 2025 - 12:29pm Plotted by: DuNguyen

#SITE UTILITIES KEYNOTES:

APPLICABLE TO SHEETS 402 – 404.
ALL KEYNOTES MAY NOT BE ON EACH SHEET.

1. REMOVE/REPLACE SANITARY SEWER LATERAL TO MAIN WITH THE SAME SLOPE AND SIZE, TYP. SEE DETAIL 1/C502 AND MECHANICAL SHEETS FOR CONTINUATION.
2. REMOVE/REPLACE 1½" DOMESTIC WATER LATERAL TO MAIN, TYP. SEE DETAIL 2/C502 AND MECHANICAL SHEETS FOR CONTINUATION.
3. (CO) PROVIDE SS CLEANOUT, TYP.
4. PROVIDE DW GATE VALVE AT CONNECTION TO RESIDENCE, TYP.
5. 4" PERFORATED DRAIN PIPE PERIMETER DRAIN, TYP. SEE DETAIL 5/C505 & 7/C501.

GENERAL NOTE:

- EACH LIVING UNIT SHALL HAVE ONE (1) NEW 1 ½" WATER SERVICE PER DETAIL 2 ON C502. WATER METERS ARE NOT REQUIRED, RATHER PROVIDE BOX AND ALL DETAILED APPURTENANCES PER THE DETAIL EXCEPT THE METER.
- EACH BUILDING REQUIRES NEW SEWER SERVICE PER C502. REMOVE OLD LATERAL ALL THE WAY BACK TO THE MAIN AND INSTALL NEW TO THE RESIDENCE AND PROVIDE CLEAN OUT AT EACH UNIT. TRENCHING PER PLANS. VERTICAL DESIGN PER FIELD CONDITIONS AND CODE REQUIREMENTS FOR SLOPE.
- FOR ASPHALT ROAD TRENCH CAP, USE HEAVY CONCRETE SECTION 6" PCC OVER 6" AB PER NOTE 2 ON C101. SUBGRADE PREP, REINFORCING AND JOINTS PER DETAILS ON C501. LIMITS OF REMOVAL PER PLAN.

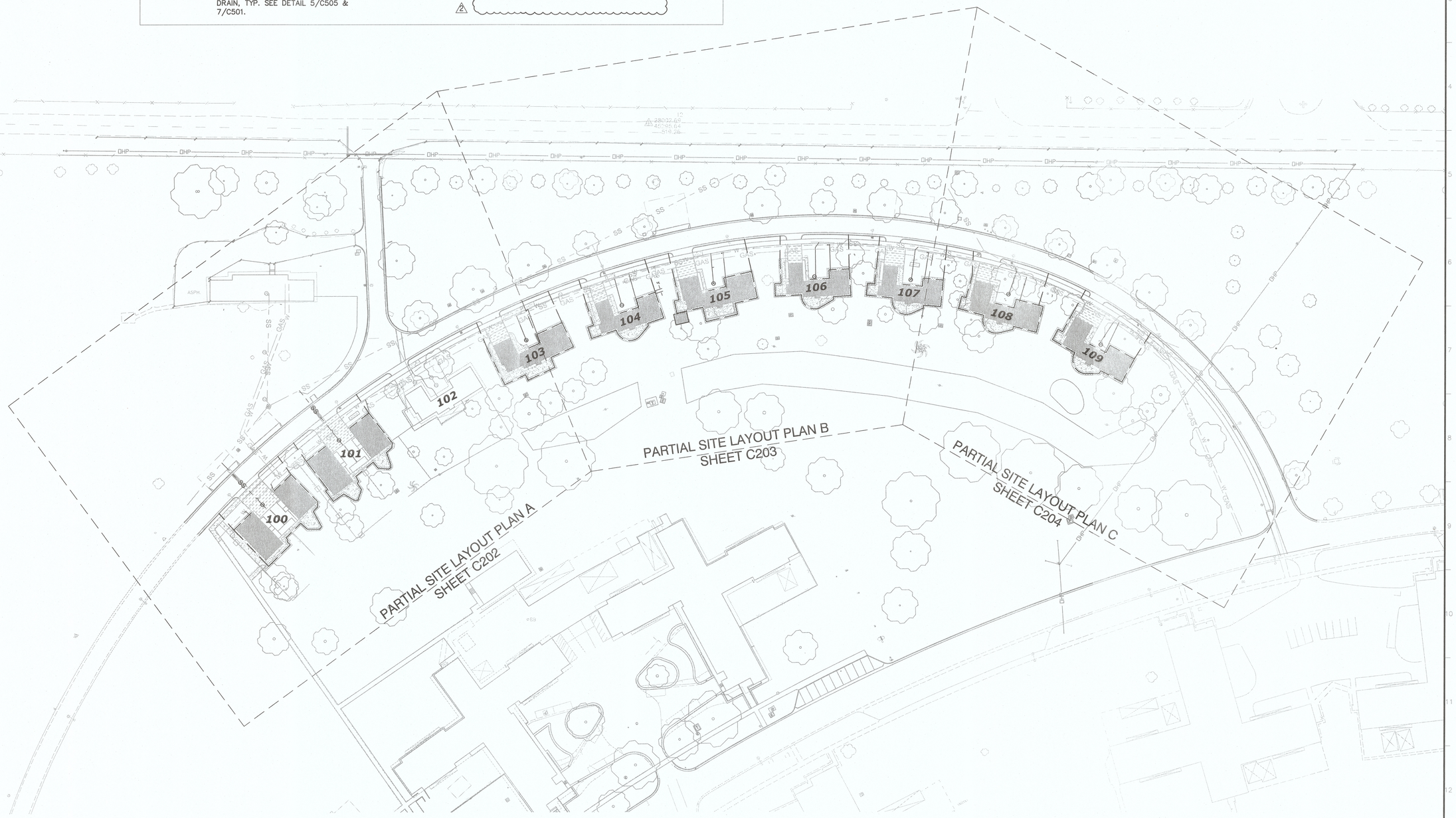

OFFICE OF THE STATE FIRE MARSHAL
APPROVED FIRE AND PANIC ONLY
Reviewed by: Lara Wolfenbarger
JUN 24 2026
Approval of this plan does not authorize or approve any omission or deviation from applicable regulations. Final approval is subject to field inspection. One set of approved plans shall be available on the project site at all times

DGS GENERAL SERVICES

Department of General Services
Architecture & Engineering Sections
State of California
Real Estate Services Division
Project Management & Development Branch
707 Third Street, Suite 4-105
West Sacramento, California 95605

REGISTERED PROFESSIONAL ENGINEER — KRISTEN M. J. NELSON — No. CE 78067 — CIVIL — STATE OF CALIFORNIA
6/22/26

Issue		
No.	Date	Description
1	8/28/25	
2	6/24/26	

Project
STAFF RESIDENCES REHABILITATION
26501 AVENUE 140
PORTERVILLE, CA 93257
PORTERVILLE, CA 93257

DEVELOPMENTAL SERVICES

Supervisor	Designed	Drawn
JD	CE	CE

DSA App No. N/A
SFM Permit No. 25-S-3082-C-DR

Sheet Title
SITE UTILITY PLAN, KEY MAP

Project Number
000000000006803

Reference North
Sheet Scale 1" = 50'
Sheet Number C401

Copyright © 2020, California Department of General Services - Real Estate Services Division

ISSUE DATE: OCTOBER 28, 2026

CAD File: X:\Projects\00xxxx\006803\DWG\PLTC401.dwg Plot Date: Jun 22, 2026 - 8:52am Plotted by: kneilson



REVIEWED FOR DSA EXEMPTION

THE SCOPE OF WORK INVOLVED IN THIS PROJECT IS EXEMPT FROM THE DIVISION OF THE STATE ARCHITECT ACCESSIBILITY REQUIREMENTS IN ACCORDANCE WITH TITLE 24, CALIFORNIA CODE OF REGULATIONS, 2019 CALIFORNIA BUILDING CODE.

OFFICE OF THE STATE FIRE MARSHAL
APPROVED FIRE AND PANIC ONLY
Reviewed by: _____
Alan Hanna, Senior Architect

SEP 2 4 2025

Approval of this plan does not authorize or approve any omission or deviation from applicable regulations. Final approval is subject to field inspection. One set of approved plans shall be available on the project site at all times.

DGS GENERAL SERVICES

Department of General Services
Architecture & Engineering Sections
State of California
Real Estate Services Division
Project Management & Development Branch
707 Third Street, Suite 4-105
West Sacramento, California 95605

REGISTERED PROFESSIONAL ENGINEER
CHRIS ELLICOCK
C 94140
CIVIL
STATE OF CALIFORNIA

8/28/25

Issue		
No.	Date	Description
1	8/28/25	

Project
STAFF RESIDENCES REHABILITATION

26501 AVENUE 140
PORTERVILLE, CA 93257
PORTERVILLE, CA 93257

DEVELOPMENTAL SERVICES

Supervisor	Designed	Drawn
JD	CE	CE

DSA App No.: N/A
SFM Permit No.: 25-S-3082-C-AC

Sheet Title
PARTIAL SITE UTILITY PLAN A

Project Number: 000000000006803

Reference North

Sheet Scale: 1" = 20'

Sheet Number: C402

Copyright © 2020, California Department of General Services - Real Estate Services Division

ISSUE DATE: OCTOBER 28, 2026

CAD File: \\SA01FIL003\Auto\CAD\Projects\60\xxxx\006803\DWG\PLT\C402.dwg Plot Date: Sep 02, 2025 - 12:29pm Plotted by: DuNguyen

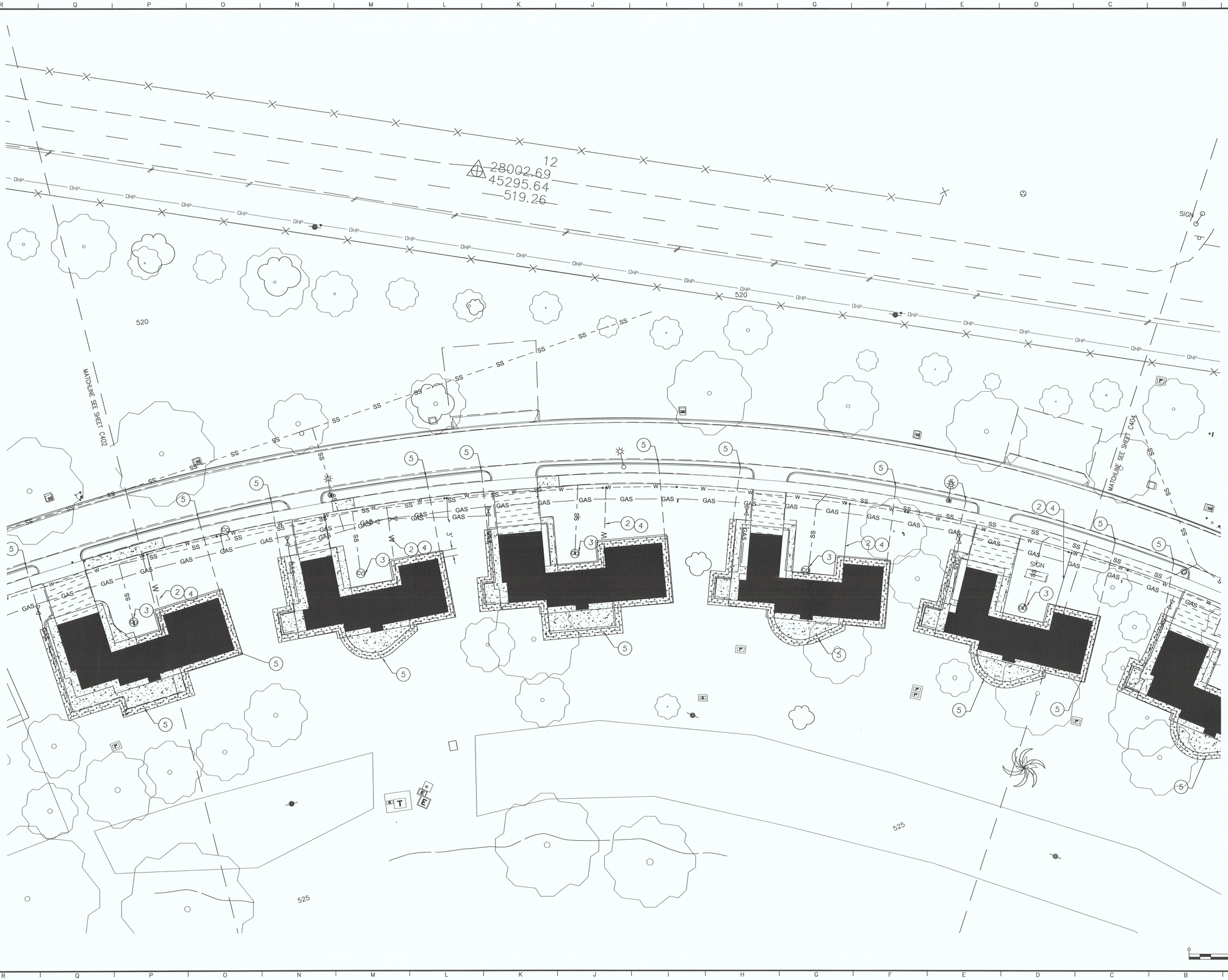

OFFICE OF THE STATE FIRE MARSHAL
APPROVED FIRE AND PANIC ONLY
Reviewed by: _____
Senior Architect

SEP 24 2025

Approval of this plan does not authorize or approve any omission or deviation from applicable regulations. Final approval is subject to field inspection. One set of approved plans shall be available on the project site at all times.

DGS GENERAL SERVICES

Department of General Services
Architecture & Engineering Sections
State of California
Real Estate Services Division
Project Management & Development Branch

707 Third Street, Suite 4-105
West Sacramento, California 95605

Issue		
No.	Date	Description
1	8/28/25	

Project
STAFF RESIDENCES REHABILITATION

26501 AVENUE 140
PORTERVILLE, CA 93257
PORTERVILLE, CA 93257

DEVELOPMENTAL SERVICES

Supervisor	Designed	Drawn
JD	CE	CE

DSA App No.	SFM Permit No.
N/A	25-S-3082-C-AC

Sheet Title
PARTIAL SITE UTILITY PLAN B

Project Number
000000000006803

Reference North

Sheet Scale
1" = 20'

Sheet Number
C403

Copyright © 2020, California Department of General Services - Real Estate Services Division

ISSUE DATE: OCTOBER 28, 2026

CAD File: X:\Projects\000xxxx\006803\DWG\PLTC403.dwg Plot Date: Sep 10, 2025 - 9:07am Plotted by: dkcltgan

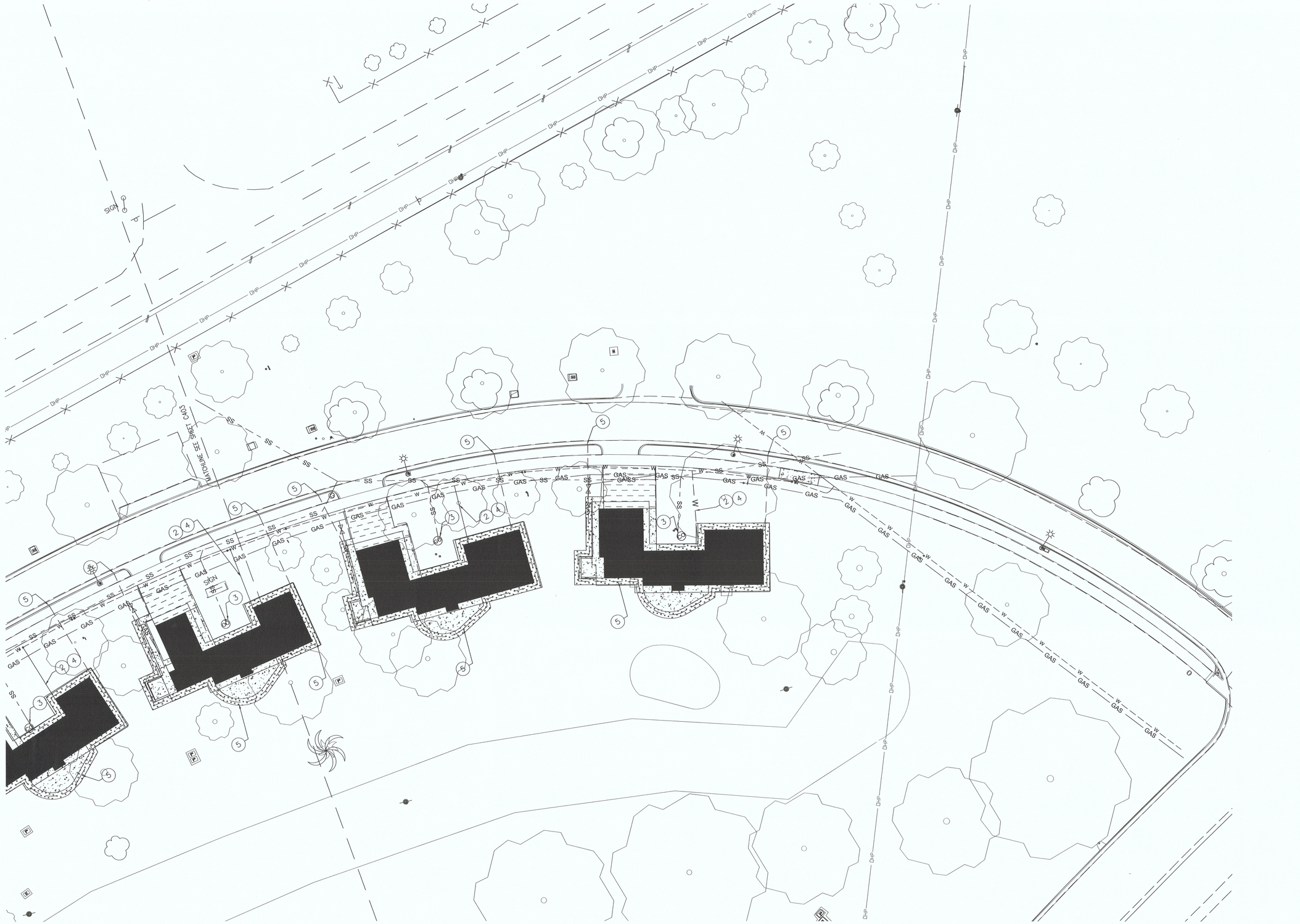

OFFICE OF THE STATE FIRE MARSHAL
APPROVED FIRE AND PANIC ONLY
Reviewed by _____
Alyssa Mora, Senior Architect

SEP 24 2025

Approval of this plan does not authorize or approve any omission or deviation from applicable regulations. Final approval is subject to field inspection. One set of approved plans shall be available on the project site at all times.

DGS GENERAL SERVICES

Department of General Services
Architecture & Engineering Sections
State of California
Real Estate Services Division
Project Management & Development Branch

707 Third Street, Suite 4-105
West Sacramento, California 95605

Issue		
No.	Date	Description
1	8/28/25	

Project
STAFF RESIDENCES REHABILITATION

26501 AVENUE 140
PORTERVILLE, CA 93257
PORTERVILLE, CA 93257

DEVELOPMENTAL SERVICES

Supervisor	Designed	Drawn
JD	CE	CE

DSA App No.	SFM Permit No.
N/A	25-S-3082-C- AC

Sheet Title
PARTIAL SITE UTILITY PLAN

Project Number
000000000006803

Reference North

Sheet Scale
1" = 20'

Sheet Number
C404

Copyright © 2020, California Department of General Services - Real Estate Services Division

ISSUE DATE: OCTOBER 28, 2026

CAD File: X:\Projects\00xxxx\006803\CWG\PLTC404.dwg Plot Date: Sep 10, 2025 - 9:06am Plotted by: ekeligen

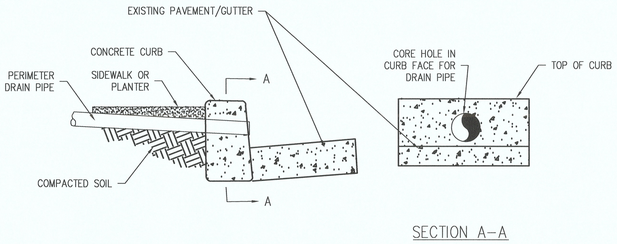

SECTION A–A

7 CURB PENETRATION FOR DRAIN LINE — NO SCALE

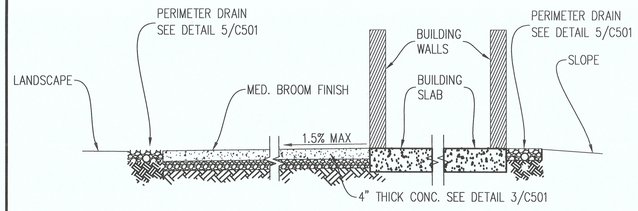

4 4" CONCRETE NEXT TO BUILDING — NO SCALE

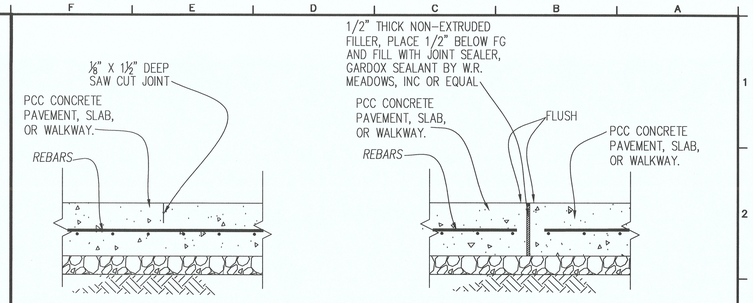

(A) WEAKENED PLANE JOINT (WJ)

(B) EXPANSION JOINT (EJ)

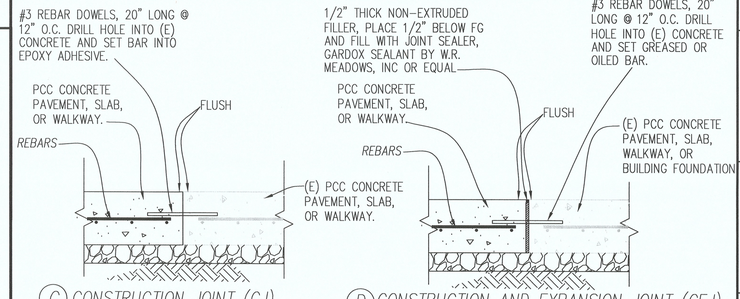

(C) CONSTRUCTION JOINT (CJ)

(D) CONSTRUCTION AND EXPANSION JOINT (CEJ)

NOTES:
1. SEE SITE PLAN FOR THICKNESS OF PCC CONCRETE PAVEMENT, OR WALKWAY.

C02_CP19

1 TYPICAL CONCRETE JOINTS — NO SCALE

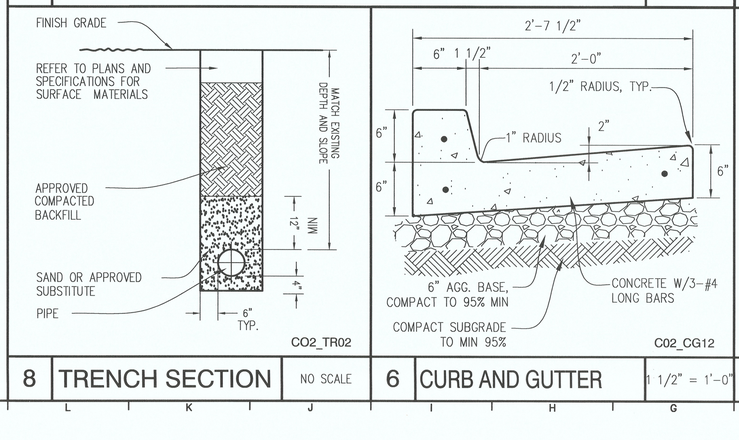

5 PERIMETER DRAIN — NO SCALE

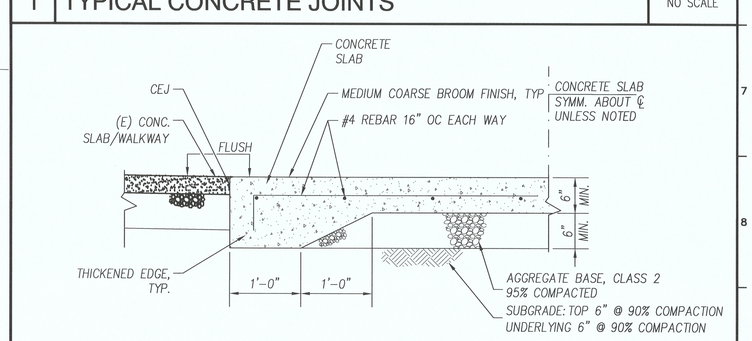

C32_CP04

2 6" CONCRETE PAVEMENT SLAB SECTION — 1" = 1'-0"

CO2_TR02

8 TRENCH SECTION — NO SCALE

C02_CG12

6 CURB AND GUTTER — 1 1/2" = 1'-0"

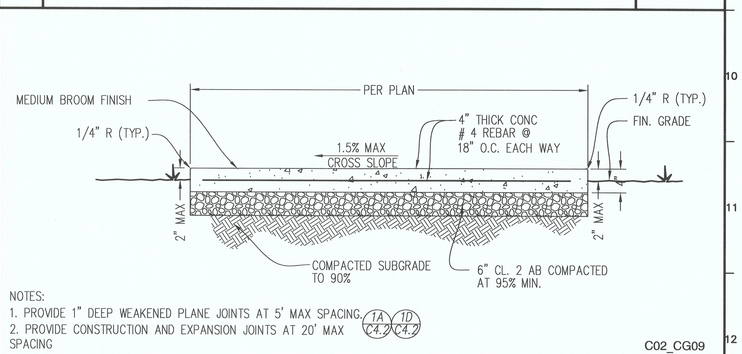

NOTES:
1. PROVIDE 1" DEEP WEAKENED PLANE JOINTS AT 5' MAX SPACING. (1A C4.2) (1D C4.2)
2. PROVIDE CONSTRUCTION AND EXPANSION JOINTS AT 20' MAX SPACING

C02_CG09

3 4" CONCRETE PAVEMENT — NO SCALE

REVIEWED FOR DSA EXEMPTION
THE SCOPE OF WORK INVOLVED IN THIS PROJECT IS EXEMPT FROM THE DIVISION OF THE STATE ARCHITECT ACCESSIBILITY REQUIREMENTS IN ACCORDANCE WITH TITLE 24, CALIFORNIA CODE OF REGULATIONS, 2019 CALIFORNIA BUILDING CODE.

OFFICE OF THE STATE FIRE MARSHAL
APPROVED FIRE AND PANIC ONLY
Reviewed by: Angel Jarvis, Senior Architect
SEP 2 4 2025

Approval of this plan does not authorize or approve any omission or deviation from applicable regulations. Final approval is subject to field inspection. One set of approved plans shall be available on the project site at all times

DGS GENERAL SERVICES

Department of General Services
Architecture & Engineering Sections
State of California
Real Estate Services Division
Project Management & Development Branch
707 Third Street, Suite 4-105
West Sacramento, California 95605

REGISTERED PROFESSIONAL ENGINEER CHRIS ELLICOCK C 94140 CIVIL STATE OF CALIFORNIA
8/28/25

Issue		
No.	Date	Description
1	8/28/25	

Project
STAFF RESIDENCES REHABILITATION
26501 AVENUE 140
PORTERVILLE, CA 93257
PORTERVILLE, CA 93257

DEVELOPMENTAL SERVICES

Supervisor	Designed	Drawn
JD	CE	CE

DSA App No.	SFM Permit No.
N/A	25-S-3082-C-AC

Sheet Title
CIVIL DETAILS

Project Number
000000000006803

Reference North

Sheet Scale
AS NOTED

Sheet Number
C501

Copyright © 2020, California Department of General Services - Real Estate Services Division

ISSUE DATE: OCTOBER 28, 2026

CAD File: \\SA01FIL003\Autocad\Projects\0xxxx\000803\DWG\PLTC501.dwg Plot Date: Sep 02, 2025 - 12:29pm Plotted by: DuNguyen

REVIEWED FOR DSA EXEMPTION
THE SCOPE OF WORK INVOLVED IN THIS PROJECT IS EXEMPT FROM THE DIVISION OF THE STATE ARCHITECT ACCESSIBILITY REQUIREMENTS IN ACCORDANCE WITH TITLE 24, CALIFORNIA CODE OF REGULATIONS, 2019 CALIFORNIA BUILDING CODE.

OFFICE OF THE STATE FIRE MARSHAL
APPROVED FIRE AND PANIC ONLY
Reviewed by: _____
Akhil Anand, Senior Architect
SEP 24 2025
Approval of this plan does not authorize or approve any omission or deviation from applicable regulations. Final approval is subject to field inspection. One set of approved plans shall be available on the project site at all times

DGS GENERAL SERVICES
Department of General Services
Architecture & Engineering Sections
State of California
Real Estate Services Division
Project Management & Development Branch
707 Third Street, Suite 4-105
West Sacramento, California 95605

REGISTERED PROFESSIONAL ENGINEER
CHRIS ELLICOCK
C 94140
CIVIL
STATE OF CALIFORNIA
8/28/25

Issue		
No.	Date	Description
1	8/28/25	

Project
STAFF RESIDENCES REHABILITATION
26501 AVENUE 140
PORTERVILLE, CA 93257
PORTERVILLE, CA 93257

DEVELOPMENTAL SERVICES

Supervisor	Designed	Drawn
JD	CE	CE

DSA App No.	SFM Permit No.
N/A	25-S-3082-C-AC

Sheet Title
CIVIL DETAILS

Project Number
000000000006803

Reference North

Sheet Scale
AS NOTED

Sheet Number
C502

Copyright © 2020, California Department of General Services - Real Estate Services Division

ISSUE DATE: OCTOBER 28, 2026

CAD File: \\SA01FIL003\Auto\CAD\Projects\00xxxx\006803\DWG\PLTC502.dwg Plot Date: Sep 02, 2025 - 12:30pm Plotted by: DuNguyen

2 TYPICAL WATER SUPPLY CONNECTION — NO SCALE

CITY OF PORTERVILLE
ENGINEERING DIVISION
Harold L. Hall 2-15-99
CITY ENGINEER R.C.E. 20186 DATE

1 1/2" WATER SERVICE — REV. **W-2**

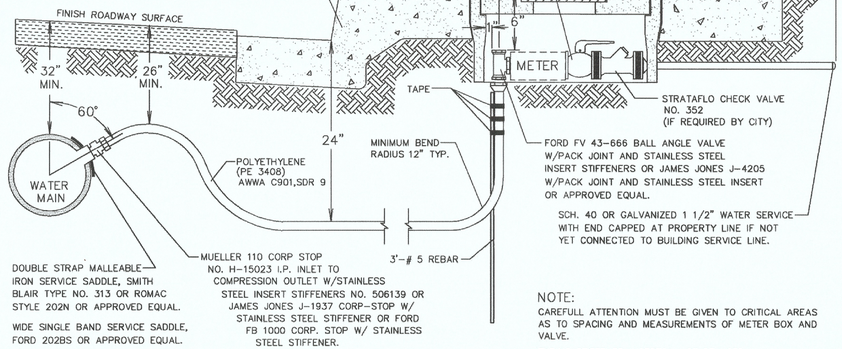

NOTE:
CAREFULL ATTENTION MUST BE GIVEN TO CRITICAL AREAS AS TO SPACING AND MEASUREMENTS OF METER BOX AND VALVE.

TUBING STIFFENER INSERTS MUST BE USED IN ALL CONNECTION FITTINGS. 24" MIN. SEPARATION BETWEEN SERVICES AT PROPERTY LINE.

TYPE OF METER DETERMINED BY WATER USED.

SUBSTITUTION OF ANY PARTS OR MATERIALS REQUIRES PRIOR APPROVAL BY THE CITY ENGINEER.

NOTE:
THIS IS A CITY STANDARD DETAIL. WATER METER NOT REQUIRED. IN PLACE OF THE METER USE STRAIGHT PIPE.

1 SANITARY SEWER LATERAL — NO SCALE

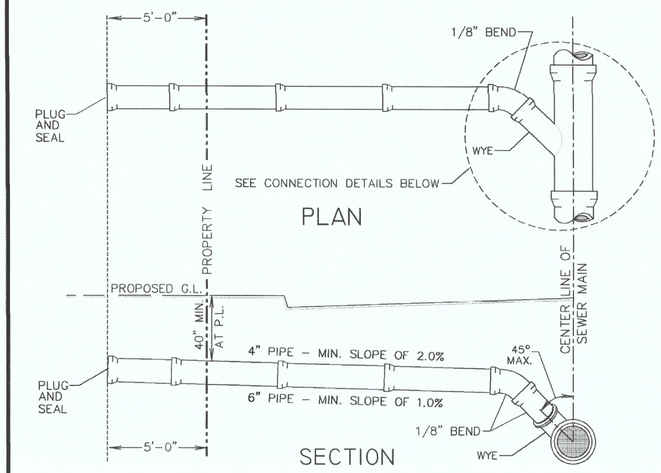

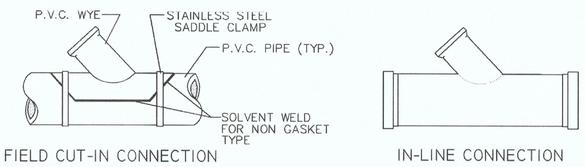

NOTES:
1. THE SEWER CONNECTIONS SHALL BE 4" OR 6" EXTRA STRENGTH VETRIFIED CLAY OR DUCTILE IRON WITH PLASTISOL, C.P.I., JC-60 OR EQUAL JOINTS. ABS AND PVC PIPE MAY ALSO BE USED AND SHALL BE JOINED IN ACCORDANCE WITH THE STANDARD SPECIFICATIONS. SADDLES FOR "CUT-IN" LATERALS SHALL BE SECURED BY STAINLESS STEEL BANDS.
2. THE GRADE OF SEWER LATERALS SHALL BE A MINIMUM OF 2.0% FOR 4" PIPE AND 1.0% FOR 6" PIPE.
3. THE ENDS OF THE LATERALS SHALL BE PLUGGED BEFORE BACKFILL WITH A CAP APPROVED BY THE MANUFACTURER OF THE PIPE FOR USE WITH PRODUCT.
4. STAMP "S" IN THE CURB WHERE EACH LATERAL IS INSTALLED.
5. CONTRACTOR TO TEST SEWER MAIN AND LATERAL AFTER UTILITIES ARE INSTALLED.

CITY OF PORTERVILLE
ENGINEERING DIVISION
Harold L. Hall 2-15-99
CITY ENGINEER R.C.E. 20186 DATE

HOUSE LATERAL — REV. **S-7**

NOTE:
THIS IS A CITY STANDARD DETAIL. REPLACE SEWER LATERAL TO MATCH EXISTING SIZE, 4" OR 6".

DEVELOPMENTAL SERVICES

STAFF RESIDENCES REHABILITATIONBLDG 100

26501 AVENUE 140
PORTERVILLE, TULARE COUNTY
CA 93257

PROJECT NUMBER: 000000000006803
SFM APPLICATION NUMBER : 25-S-3083-C-DR (PREVIOUSLY APPROVED AS 20-S-2687-C)



THE SCOPE OF WORK INVOLVED IN THIS PROJECT IS EXEMPT FROM THE DIVISION OF THE STATE ARCHITECT ACCESSIBILITY REQUIREMENTS IN ACCORDANCE WITH TITLE 24, CALIFORNIA CODE OF REGULATIONS, 2016 CALIFORNIA BUILDING CODE.

OFFICE OF THE STATE FIRE MARSHAL
APPROVED FIRE AND PANIC ONLY
09/29/25
25-3083
Approval of this plan does not authorize or approve any omission or deviation from applicable regulations. Final approval is subject to field inspection. One set of approved plans shall be available on the project site at all times.

ACCESSIBILITY NOTES

ACCESSIBLE PATH OF TRAVEL:

ACCESSIBLE PATH PER APPLICABLE CALIFORNIA BUILDING CODE PROVISIONS AND PER THE FOLLOWING DEFINITION IN CBC SECTION 202:

SUBSTANTIAL IMPROVEMENT: ANY REPAIR, RECONSTRUCTION, REHABILITATION, ALTERATION, ADDITION OR OTHER IMPROVEMENT OF BUILDING OR STRUCTURE, THE COST OF WHICH EQUALS OR EXCEEDS 50 PERCENT OF THE MARKET VALUE OF THE STRUCTURE BEFORE THE IMPROVEMENT OR REPAIR IS STARTED. ...THE TERM DOES NOT, HOWEVER, INCLUDE. ...:
ANY ALTERATION OF A HISTORIC STRUCTURE PROVIDED THAT THE ALTERATION WILL NOT PRECLUDE THE STRUCTURE'S CONTINUED DESIGNATION AS A HISTORIC STRUCTURE.

SINCE THIS BUILDING QUALIFIES AS HISTORIC, IT IS NOT REQUIRED TO COMPLY WITH CBC SECTION 11B-233.1.1 RESIDENTIAL DWELLING UNITS WITH MOBILITY FEATURES.

SINCE THIS BUILDING IS NOT REQUIRED TO COMPLY WITH CBC SECTION 11B-233.3.1.1, IT IS ALSO NOT REQUIRED TO BE LOCATED ON AN ACCESSIBLE ROUTE PER CBC SECTION 11B-233.3.4.2.

APPLICABLE CODES

PARTIAL LIST OF APPLICABLE CODES

2022 CALIFORNIA ADMINISTRATIVE CODE (CAC), PART 1, TITLE 24 CCR
2022 CALIFORNIA BUILDING CODE (CBC), PART 2, TITLE 24 CCR

2022 CALIFORNIA ELECTRICAL CODE (CEC), PART 3, TITLE 24 CCR

2022 CALIFORNIA MECHANICAL CODE (CMC), PART 4, TITLE 24 CCR

2022 CALIFORNIA PLUMBING CODE (CPC), PART 5, TITLE 24 CCR

2022 CALIFORNIA ENERGY CODE (CEC), PART 6, TITLE 24 CCR
2022 CALIFORNIA FIRE CODE (CFC), PART 9, TITLE 24 CCR

2022 CALIFORNIA EXISTING BUILDING CODE (CEBC), PART 10, TITLE 24 CCR
2022 CALIFORNIA HISTORIC BUILDING CODE

2022 CALIFORNIA REFERENCED STANDARDS CODE, PART 12, TITLE 24 CCR
TITLE 19 CCR, PUBLIC SAFETY, STATE FIRE MARSHAL REGULATIONS

PARTIAL LIST OF APPLICABLE STANDARDS

FOR A COMPLETE LIST OF APPLICABLE NFPA STANDARDS REFER TO 2022 CBC (SFM) CHAPTER 35 AND CALIFORNIA FIRE CODE (CFC) CHAPTER 80.

SEE CALIFORNIA BUILDING CODE, CHAPTER 35, FOR STATE OF CALIFORNIA AMENDMENTS TO THE NFPA STANDARDS

AMERICANS WITH DISABILITIES ACT 2010 STANDARDS INCLUDING:
- TITLE II REGULATIONS AT 28 CFR PART 35.151 AND;
- 2004 AMERICANS WITH DISABILITIES ACT ACCESSIBLE GUIDELINES (ADAAG) AT 36 CFR PART 1191 APPENDICES D AND C

WHERE THESE TWO DIFFER, 28 CFR PART 35.151 SHALL PREVAIL

SHEET INDEX

GENERAL
GC01 COVER SHEET BLDG 100
GC02 BUILDING INFORMATION AND CODE REVIEW

HAZMAT
HM001 VICINITY MAP AND FLOOR / ROOF PLANS

ARCHITECTURAL
AC01 ARCHITECTURAL COVER SHEET BLDG 100
AC10 DUPLEX DEMOLITION FLOOR PLAN BLDG 100
AC11 DUPLEX FLOOR PLAN BLDG 100
AC12 DUPLEX REFLECTED CEILING PLAN BLDG 100
AC13 DUPLEX ROOF PLAN BLDG 100
AC21 DUPLEX EXTERIOR ELEVATIONS BLDG 100
AC31 DOOR AND WINDOW TYPES SCHEDULES BLDG 100
AC41 ENLARGED PLANS AND INTERIOR ELEVATIONS & DETAILS
AC50 VARIOUS DETAILS BLDG 100
AC51 VARIOUS DETAILS BLDG 100

MECHANICAL
M001 HVAC LEGENDS & NOTES
M002 HVAC LEGENDS & NOTES
M003 HVAC SCHEDULES
M004 TITLE 24 COMPLIANCE FORMS
MC11 DUPLEX HVAC DEMO PLAN BLDG 100
MC21 DUPLEX HVAC PLAN BLDG 100
MC22 DUPLEX HVAC ROOF PLAN BLDG 100
MC50 HVAC DETAILS
MC60 HVAC CONTROLS

PLUMBING
P001 PLUMBING LEGENDS & NOTES
P002 PLUMBING LEGENDS & NOTES
P003 PLUMBING SCHEDULE
PC11 DUPLEX PLUMBING DEMO PLAN BLDG 100
PC21 DUPLEX PLUMBING PLAN BLDG 100
P500 PLUMBING DETAILS

ELECTRICAL
E001 SYMBOLS LIST AND SHEET INDEX
E002 SCHEDULES, NOTES AND ABBREVIATIONS
E101 OVERALL SITE PLAN
EC10 DEMOLITION PLAN DUPLEX BLDG 100
EC11 ELECTRICAL PLAN DUPLEX BLDG 100
E300 POWER ONE LINE DIAGRAMS & DETAILS

TOTAL SHEETS: 34

PROJECT TEAM

PROJECT MANAGER:	ART IWASA Art.Iwasa@dgs.ca.gov (916) 376-1737	
ARCHITECTURE:	DAVID SOLOMON -	PROJECT ARCHITECT
	ELENA KELTGEN -	ARCHITECTURAL DESIGNER
STRUCTURAL:	BALI GAURAV -	STRUCTURAL ENGINEER
MECHANICAL:	KEVIN STILLMAN -	PRINCIPAL. CAPITOL ENGINEERS CONSULTANTS
ELECTRICAL:	SCOTT WHEELER -	PRINCIPAL. THE ENGINEERING ENTERPRISE
HAZARDOUS MATERIAL CONSULTANT:	DAVID WATTS	PRINCIPAL. GEOCON CONSULTANTS, INC

PROJECT LOCATION



PROJECT SCOPE

1. REHABILITATE STAFF DUPLEX DWELLING UNIT BLDG. 100. REPLACE ROOF. FLOORS, TILES, GYP BOARD WALLS AND CEILINGS, KITCHENS, BATHROOMS, AND PAINT INTERIOR AND EXTERIOR. UPGRADE HVAC, PLUMBING AND ELECTRICAL SYSTEMS.
2. REMOVE ALL EXPOSED CONDUITS, PIPES, WIRES, ETC.
3. REPAIR STUCCO, SLABS, SOFFITS, WINDOWS AND EXTERIOR DOORS.
4. REPAIR/SERVICE SIDEWALKS, DRIVEWAYS, LANDSCAPING.
5. ABATE HAZMAT.
6. THE BUILDING CONTAINS HAZARDOUS BUILDING MATERIALS AND MUST BE ABATED PRIOR TO STARTING ANY DEMOLITION WORK. REFER TO HAZARDOUS MATERIALS SURVEY.
7. THE STAFF DWELLING UNIT b AND SURROUNDING AREAS ARE WITHIN A HISTORIC DISTRICT AND ARE BOUND BY THE FEMA PROGRAMMATIC AGREEMENT GOVERNING SECTION 106 REVIEW OF FEMA FUNDED UNDERTAKINGS IN CALIFORNIA

INDEX LEGEND

SHEET INDEX LEGEND
GC01

- SEQUENCE DESIGNATOR
- SHEET TYPE DESIGNATOR
  EXAMPLE:
  0 - GENERAL 2 - ELEVATIONS
  1 - PLANS # - ETC
- BUILDING LETTER (C = BLDG 100)
- DISCIPLINE DESIGNATOR
  EXAMPLE:
  G - GENERAL M - MECHANICAL
  C - CIVIL P - PLUMBING
  A - ARCHITECTURE E - ELECTRICAL
  S - STRUCTURAL X - ETC

KEY PLAN

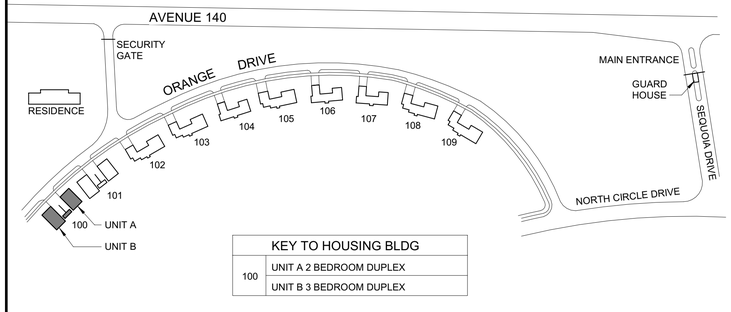

KEY TO HOUSING BLDG	
100	UNIT A 2 BEDROOM DUPLEX
	UNIT B 3 BEDROOM DUPLEX

DGS GENERAL SERVICES
Department of General Services
Architecture & Engineering Sections
State of California
Real Estate Services Division
Project Management & Development Branch
707 Third Street, Suite 4-105
West Sacramento, California 95605

LICENSED ARCHITECT
David Michael Solomon
C22706
REN.09/30/2025
STATE OF CALIFORNIA

Issue

No.	Date	Description
1	08/06/25	

Project
STAFF RESIDENCES REHABILITATION
26501 AVENUE 140
PORTERVILLE, TULARE COUNTY
CA 93257
DEVELOPMENTAL SERVICES

Supervisor	Designed	Drawn
D.S.	E.K.	E.K.
DSA App No.	SFM Permit No.	
N/A	25-S-3083-C-DR	

Sheet Title
COVER SHEET BLDG 100

Project Number
000000000006803

Reference North | Sheet Scale

Sheet Number
GC01

Copyright © 2021, California Department of General Services: Real Estate Services Division

ISSUE DATE: OCTOBER 28, 2026

RELATIVE BORDER SCALE IN INCHES 0 1 2

X:\Projects\00xxxx\006803\RVT\ARC\006803_ARC_CENTRAL_TEST_BLDG 100.rvt
8/25/2025 2:09:57 PM

THE SCOPE OF WORK INVOLVED IN THIS PROJECT IS EXEMPT FROM THE DIVISION OF THE STATE ARCHITECT ACCESSIBILITY REQUIREMENTS IN ACCORDANCE WITH TITLE 24, CALIFORNIA CODE OF REGULATIONS, 2016 CALIFORNIA BUILDING CODE.

OFFICE OF THE STATE FIRE MARSHAL
APPROVED FIRE AND PANIC ONLY

09/29/25
25-3083

Approval of this plan does not authorize or approve any omission or deviation from applicable regulations. Final approval is subject to field inspection. One set of approved plans shall be available on the project site at all times.

BUILDING INFORMATION - DUPLEXBLDG 100

NONSTRUCTURAL PROVISIONS	
OCCUPANCY GROUPS AND VARIED USES	(E) R-3, NOT CHANGING USE
BUILDING CONSTRUCTION TYPE	(E) TYPE V-B, NOT CHANGING USE
NUMBER OF STORIES	(E) SINGLE STORY, NOT INCREASING STORIES
ACTUAL BUILDING HEIGHT	(E) 13'-10" - NOT INCREASING HEIGHT
BULDING AREA IN SQUARE FEET	(E) UNIT A 919S.F., UNIT B 1,090 S.F., UTIL./STOR. 108 S.F., CARPORT 451 = 2,568 S.F.
AREA OF PROJECT IN SQUARE FEET	(E) 2,566 S.F. NOT INCREASING SIZE
SEPARATED, NON-SEPARATED, ACCESSORY USE	(E) NON-SEPARATED; NOT CHANGING USE
ALLOWABLE AREA	(E) - NOT INCREASING SIZE OR CHANGING USE
AREA INCREASE	(E) - NOT INCREASING SIZE OR CHANGING USE
HEIGHT INCREASE	(E) - NOT INCREASING SIZE OR CHANGING USE
FIRE SPRINKLERS (TYPE, FULL, PARTIAL)	(E) - NONE, NOT CHANGING USE
FIRE ALARM (TYPE)	YES - SMOKE DETECTORS
OTHER FIRE PROTECTION SYSTEM (TYPE)	(E) NO
SMOKE CONTROL SYSTEM (Y/N)	(E) NO
OCCUPANT LOAD FOR ENTIRE BUILDING AND EACH FLOOR	8 (E) - NO SIZE OR USE CHANGE
YEAR BUILDING WAS CONSTRUCTED	1953
HIGH FIRE HAZARD SEVERITY ZONE (Y/N)	NO
SEISMIC JOINTS AND LOCATIONS	NO
EMERGENCY RESPONDER RADIO COVERAGE (Y/N)	NO
PART 8,CHBC: LIGHT VENTILATION AREA OF 60% OR 6 SQ.FT IN SLEEPING ROOMS (Y/N)	YES
PART 8,CHBC: RESCUE WINDOWS OF 3.3 SQ.FT W/MIN WIDTH/HEIGHTH OF 18" (Y/N)	YES

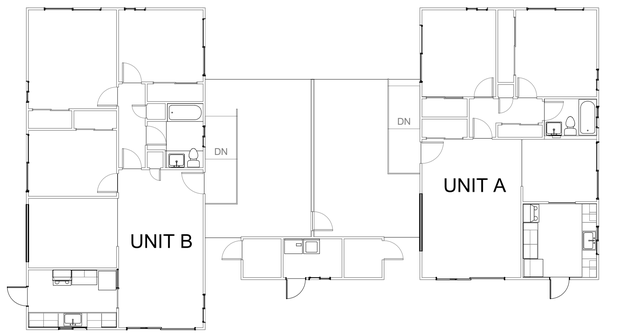

1 DUPLEX - FLOOR PLAN- FOR CODE ANALYSIS — 1" = 10'-0"

Department of General Services
Architecture & Engineering Sections
State of California
Real Estate Services Division
Project Management & Development Branch
707 Third Street, Suite 4-105
West Sacramento, California 95605

LICENSED ARCHITECT
David Michael Solomon
C22706
REN:09/30/2025
STATE OF CALIFORNIA

Issue No.	Date	Description
1	08/06/25	

Project
STAFF RESIDENCES REHABILITATION

26501 AVENUE 140
PORTERVILLE, TULARE COUNTY
CA 93257

DEVELOPMENTAL SERVICES

Supervisor	Designed	Drawn
D.S.	E. K.	E. K.

DSA App No.	SFM Permit No.
N/A	25-S-3083-C-DR

Sheet Title
INFORMATION AND CODE REVIEW BLDG 100

Project Number
000000000006803

Reference North | Sheet Scale

Sheet Number
GC02

Copyright © 2021, California Department of General Services- Real Estate Services Division

RELATIVE BORDER SCALE IN INCHES 0 1 2 3

ISSUE DATE: OCTOBER 28, 2026

24 x 36
X:\Projects\00xxxx\006803\RVT\ARC\006803_ARC_CENTRAL_TEST_BLDG 100.rvt
8/25/2025 2:10:01 PM

OFFICE OF THE STATE FIRE MARSHAL
APPROVED FIRE AND PANIC ONLY
10/1/2026
25-3083
Approval of this plan does not authorize or approve any omission or deviation from applicable regulations. Final approval is subject to field inspection. One set of approved plans shall be available on the project site at all times.

DGS GENERAL SERVICES
Department of General Services
Architecture & Engineering Sections
State of California
Real Estate Services Division
Project Management & Development Branch
707 Third Street, Suite 4-105
West Sacramento, California 95605

David Michael Solomon
LICENSED ARCHITECT
C22706
REN. 09/30/2027
STATE OF CALIFORNIA

GEOCON CONSULTANTS, INC.
3160 GOLD VALLEY DR - SUITE 800 - RANCHO CORDOVA, CA 95742
PHONE 916.852.9118

Issue

No.	Date	Description
1	9/25/20	
2	9/18/26	SURVEY UPDATE

Project
STAFF RESIDENCES REHABILITATION

26501 AVENUE 140
PORTERVILLE, CA 93257

DEVELOPMENTAL SERVICES

Supervisor	Designed	Drawn

DSA App No.	SFM Permit No.
02-118631	

Sheet Title
FLOOR/
ROOF PLANS

Project Number
000000000006803

Reference North | Sheet Scale

Sheet Number
HM001

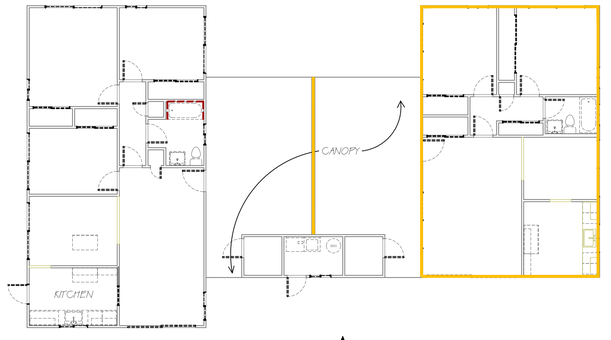

LEGEND:
- Lead Abatement Location
- Asbestos Abatement Area

N

0 5 10
APPROX. SCALE: feet
(1" = 10')

Building 100A/B
FLOOR PLAN

Copyright © 2026, California Department of General Services - Real Estate Services Division

CAD File: C:\Users\Brown MI\OneDrive - Geocon, Inc\GIS_Graphics\Projects\S2900-07-19_DDS_Staff_Residence_Rehab_ACM_LCP\02_Data\03_SourceData\CAD\BLDG100_Abatement_Plan.dwg Plot Date: Sep 24, 2026 - 9:50am Plotted by: BrownM

RELATIVE BORDER SCALE IN INCHES 0 1 2 3

ISSUE DATE: OCTOBER 28, 2026

ARCHITECTURAL ABBREVIATIONS

℄	CENTERLINE
⌀	DIAMETER OR ROUND
#	NUMBER
AC	ASPHALT CONCRETE
ACC	ACCESSORY
ACM	ASBESTOS CONTAINING MATERIAL
AFF	ABOVE FINISH FLOOR
AHU	AIR HANDLING UNIT
AR	ACCESSIBLE ROUTE
ARCH	ARCHITECTURAL
ASB	ASBESTOS
AVG	AVERAGE
BD	BOARD
BLDG	BUILDING
BO	BOTTOM OF
BOT	BOTTOM
C	DEGREE CELCIUS
CATV	CABLE TELEVISION
CCTV	CLOSED-CIRCUIT TELEVISION
CF	CUBIC FEET
CFOI	CONTRACTOR FURNISHED OWNER INSTALLED
CJ	CONTROL JOINT
CI	CAST IRON
CLR	CLEAR
CLG	CEILING
CMU	CONCRETE MASONRY UNIT
COL	COLUMN
COMM	COMMUNICATION
COMP	COMPOSITION
CONC	CONCRETE
CONF	CONFERENCE
CONT	CONTINUATION OR CONTINUOUS
CORR	CORRIDOR
DBL	DOUBLE
DEPT	DEPARTMENT
DEMO	DEMOLITION
DF	DRINKING FOUNTAIN
DIA	DIAMETER
DIM	DIMENSION
DISP	DISPENSER
DN	DOWN
DR	DOOR
DS	DOWNSPOUT
DW	DISH WASHER
DWG	DRAWING
E	EAST
(E)	EXISTING
EA	EACH
EJ	EXPANSION JOINT
EL	ELEVATION
ELEC	ELECTRICAL
ELEV	ELEVATOR
ENLG	ENLARGED
EMER	EMERGENCY
EQ	EQUAL
EXP	EXPANSION
EXT	EXTERIOR
FA	FIRE ALARM
FAAP	FIRE ALARM ANNUNCIATOR PANEL
FACP	FIRE ALARM CONTROL PANEL
FD	FLOOR DRAIN
FE	FIRE EXTINGUISHER
FEC	FIRE EXTINGUISHER CABINET
FF	FINISH FLOOR
FG	FINISH GRADE
FLR	FLOOR
FLS	FIRE LIFE SAFETY
FO	FACE OF
FOF	FACE OF FINISH
FOS	FACE OF STUD
FRP	FIBERGLASS REINFORCED PLASTIC
FRZR	FREEZER
FS	FIRE SUPPRESSION
FT	FOOT OR FEET
FTG	FOOTING
FV	FIELD VERIFY
GA	GAUGE
GAL	GALLON
GALV	GALVANIZED
GB	GRAB BAR
GI	GALVANIZED IRON
GL	GLASS
GSM	GALVANIZED SHEET METAL
GSP	GALVANIZED STEEL PIPE
GYP	GYPSUM
GYPBD	GYPSUM BOARD
HB	HOSE BIBB
HC	HOLLOW CORE
HM	HOLLOW METAL
HORIZ	HORIZONTAL
HT	HEIGHT
HVAC	HEATING, VENTILATION, AND AIR CONDITIONING
ID	INSIDE DIAMETER
IN	INCH
INSUL	INSULATION
INT	INTERIOR
JB	JUNCTION BOX
JAN	JANITOR
JT	JOINT
KIT	KITCHEN
L	LENGTH
LAB	LABORATORY
LAV	LAVATORY
LB	POUND
LTG	LIGHTING
M	METER
MAX	MAXIMUM
MC	MEDICINE CABINET
MECH	MECHANICAL
MEMB	MEMBRANE
MNF	MANUFACTURER
MIN	MINIMUM
MISC	MISCELLANEOUS
MM	MILLIMETER
MTD	MOUNTED
MTL	METAL
MUL	MULLION
N	NORTH
(N)	NEW
NIC	NOT IN CONTRACT
NOM	NOMINAL
NTS	NOT TO SCALE
OC	ON CENTER
OD	OUTSIDE DIAMETER
OFCI	OWNER FURNISHED CONTRACTOR INSTALLED
OFOI	OWNER FURNISHED OWNER INSTALLED
OFF	OFFICE
OH	OPPOSITE HAND
OPP	OPPOSITE
O/	OVER
PL	PROPERTY LINE OR PLATE
PL	PLANTER
PLAM	PLASTIC LAMINATE
PLAS	PLASTER
PLWD	PLYWOOD
POT	PATH OF TRAVEL
PR	PAIR
PSI	POUNDS PER SQUARE INCH
PT	PRESSURE TREATED
PTD	PAPER TOWEL DISPENSER
PVC	POLYVINYL CHLORIDE
QT	QUARRY TILE
R	RADIUS
RCPT	RECEPTION
RD	ROOF DRAIN
REF	REFERENCE
REFR	REFRIGERATOR
REINF	REINFORCED
REQ'D	REQUIRED
RM	ROOM
RO	ROUGH OPENING
RR	RESTROOM
RWD	REDWOOD
RWL	RAIN WATER LEADER
S	SOUTH
SAWPM	SELF-ADHERING WATERPROOF MEMBRANE
SCD	SEAT COVER DISPENSER
SCHED	SCHEDULE
SD	SOAP DISPENSER
SDST	SELF DRILLING SELF TAPPING
SF	SQUARE FEET, SQUARE FOOT
SIM	SIMILAR
SMS	SHEET METAL SCREW
SND	SANITARY NAPKIN DISPENSER
SNR	SANITARY NAPKIN RECEPTACLE
SQ	SQUARE
SSC	SOLID SURFACE COUNTERTOP
SS	SERVICE SINK
SST	STAINLESS STEEL
STL	STEEL
STD	STANDARD
STOR	STORAGE
STRUCT	STRUCTURAL
SUPPL	SUPPLEMENTAL
T	TREAD
T&B	TOP AND BOTTOM
T&G	TONGUE AND GROOVE
TB	TOWEL BAR
TEL	TELEPHONE
TEMP	TEMPORARY
TER	TERRAZZO
TERM	TERMINATION
THK	THICK
TJ	TOOLED JOINT
TO	TOP OF
TPD	TOILET PAPER DISPENSER
TV	TELEVISION
TYP	TYPICAL
UON	UNLESS OTHERWISE NOTED
UR	URINAL
VCT	VINYL COMPOSITION TILE
VERT	VERTICAL
VEST	VESTIBULE
VIF	VERIFY IN FIELD
W	WEST
W/	WITH
W/O	WITHOUT
WC	WATER CLOSET
WCHR	WHEELCHAIR
WD	WOOD
WH	WATER HEATER
WP	WATER PROOF
WR	WATER RESISTANT
WT	WEIGHT
WWF	WELDED WIRE FABRIC
YD	YARD

NOTE: ADDITIONAL AND OR VARIED ABBREVIATIONS MAY BE FOUND IN OTHER DISCIPLINES. IF THERE IS A CONFLICT, ABBREVIATIONS IDENTIFIED IN OTHER DISCIPLINES DICTATE WHITHIN THE APPLICABLE DISCIPLINE DRAWINGS.

ARCHITECTURAL MATERIALS

- EARTH
- POROUS FILL
- CONCRETE
- BRICK
- CONCRETE BLOCK
- METAL
- CONTINUOUS WOOD
- SHIM OR NON-CONT. WOOD BLKING
- FINISH WOOD
- PLYWOOD
- GYPSUM WALLBOARD
- STONE
- RIGID INSULATION
- BATT INSULATION
- ACOUSTIC TILE
- PLASTER ON METAL LATH
- TILE
- SEALANT W/ BACK-UP MATERIAL

ARCHITECTURAL SYMBOLS

CENTERLINE

BREAK LINE

MATCH LINE

ELEVATION MARK OR DATUM POINT — T.O.PARAPET 24'-0"

WALL TYPE (SEE A611) — 1S4A

REVISION CLOUD (EXTENT OF REVISION)

REVISION IDENTIFIER — 1

GRID LINE — D

NORTH ARROW

ROOM NAME AND NUMBER — OFFICE 100

DOOR NUMBER — 100

WINDOW TYPE — 1t

KEYNOTE REFERENCE — 0907

EXTERIOR ELEVATION REFERENCE — EAST, 1 AC21

SECTION REFERENCE — 12 / A5.1 (SECTION NUMBER / SHEET NUMBER)

DETAIL REFERENCE — 12 / A5.1

INTERIOR ELEVATION REFERENCE — 1 / 2 / 3 / 4 A221 (ELEVATION NUMBER / SHEET NUMBER)

ALIGN SURFACES

SIGNAGE REFERENCE — 01-01

GENERAL NOTES

1. THESE GENERAL NOTES APPLY TO THE ARCHITECTURAL DRAWINGS AND SHALL GOVERN UNLESS NOTED OTHERWISE BY GENERAL NOTES OR KEYNOTES ON SPECIFIC SHEETS.
2. DO NOT SCALE DRAWINGS. IF DIMENSION IS NOT PROVIDED, CONSULT STATE FOR DIRECTION.
3. ALL ELEMENTS SHALL BE CONSTRUCTED IN CONFORMANCE WITH THE AMERICANS DISABILITIES ACT (ADA), 2010 ADA STANDARDS FOR ACCESSIBLE DESIGN (ADAS), AND THE 2022 CALIFORNIA BUILDING CODE, CHAPTER 11B. WHERE THESE REGULATIONS CONFLICT, ADHERENCE TO THE PROVISION THAT PROVIDES THE HIGHEST DEGREE OF ACCESS IS REQUIRED.
4. ALL DIMENSIONS ARE TO FACE OF FINISH UNLESS OTHERWISE NOTED.

THE SCOPE OF WORK INVOLVED IN THIS PROJECT IS EXEMPT FROM THE DIVISION OF THE STATE ARCHITECT ACCESSIBILITY REQUIREMENTS IN ACCORDANCE WITH TITLE 24, CALIFORNIA CODE OF REGULATIONS, 2016 CALIFORNIA BUILDING CODE.

OFFICE OF THE STATE FIRE MARSHAL
APPROVED FIRE AND PANIC ONLY
09/29/25
25-3083
Approval of this plan does not authorize or approve any omission or deviation from applicable regulations. Final approval is subject to field inspection. One set of approved plans shall be available on the project site at all times.

DGS GENERAL SERVICES
Department of General Services
Architecture & Engineering Sections
State of California
Real Estate Services Division
Project Management & Development Branch
707 Third Street, Suite 4-105
West Sacramento, California 95605

David Michael Solomon
LICENSED ARCHITECT
C22706
REN:09/30/2025
STATE OF CALIFORNIA

Issue

No.	Date	Description
1	08/06/25	

Project
STAFF RESIDENCES REHABILITATION
26501 AVENUE 140
PORTERVILLE, TULARE COUNTY
CA 93257

DEVELOPMENTAL SERVICES

Supervisor	Designed	Drawn
D.S.	E.K.	E.K.

DSA App No.	SFM Permit No.
N/A	25-S-3083-C-DR

Sheet Title
ARCHITECTURAL COVER SHEET

Project Number
000000000006803

Sheet Scale

Sheet Number
AC01

Copyright © 2021, California Department of General Services- Real Estate Services Division

ISSUE DATE: OCTOBER 28, 2026

RELATIVE BORDER SCALE IN INCHES 0 1 2 3

X:\Projects\00xxxx\006803\RVT\ARC\006803_ARC_CENTRAL_TEST_BLDG 100.rvt
8/25/2025 2:06:56 PM



4 (E) CONDITION CARPORT NOT TO SCALE



3 (E) CONDITION BLDG 100 NOT TO SCALE



A



B

2 EXISITNG CONDITION OF KITCHEN UNIT A & B BLDG 100 NOT TO SCALE

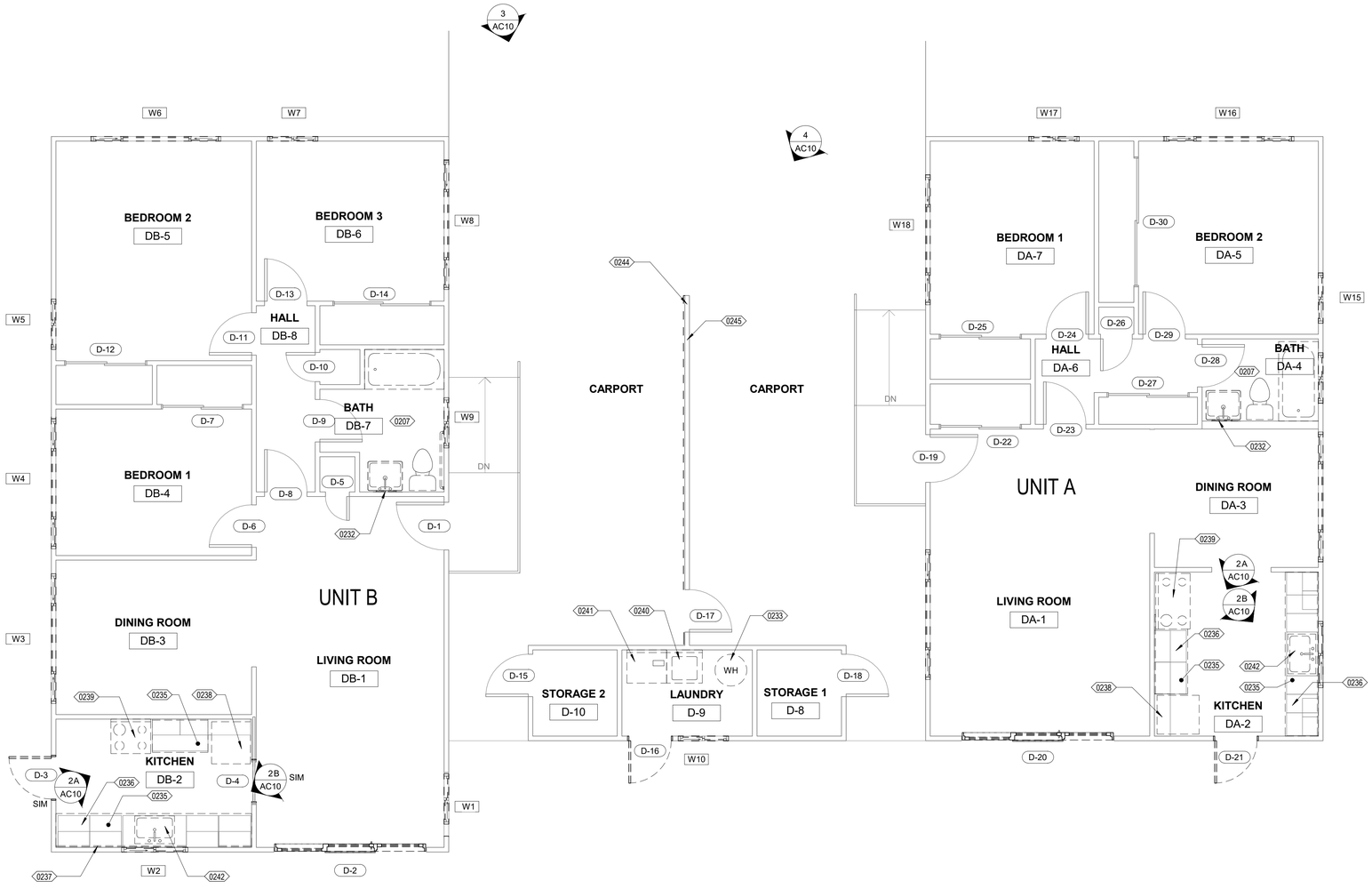

1 DUPLEX - DEMO FLOOR PLAN 1/4" = 1'-0"

LEGEND

- REMOVE EXISTING SINGLE DOOR AND TRIM, TYP.
- REMOVE EXISTING SLIDING WINDOW, TYP.
- EXISTING DOOR TO REMAIN AND BE REPAIRED, TYP. SEE DOOR SCHEDULE AND NOTES
- WH — REMOVE EXISTING WATER HEATER
- REMOVE EXISTING TUB
- REMOVE EXISTING TOILET
- REMOVE EXISTING SINK

KEYNOTES DEMOLITION FLOOR PLAN

Key Value	Keynote Text
0207	REMOVE EXISTING CERAMIC TILE AND BATHROOM ACCESSORIES
0232	REMOVE EXISTING MEDICINE CABINET
0233	REMOVE EXISTING WATER HEATER
0235	REMOVE EXISTING COUNTER TOP
0236	EXISTING STEEL CABINETS TO REMAIN
0237	REMOVE EXISTING BACK SPLASH TILES
0238	REMOVE EXISTING REFRIGERATOR
0239	REMOVE EXISTING COOK TOP & OVEN
0240	REMOVE EXISTING DRYER
0241	REMOVE EXISTING WASHER
0242	REMOVE EXISTING KITCHEN SINK
0244	REMOVE EXISTING WOOD SIDING AND TRIM.
0245	EXISTING FENCE STRUCTURE TO REMAIN. STRUCTURE MAY NEED REPAIR.

GENERAL NOTES

1. SEE SHEET HM001 HAZARDOUS MATERIALS.
2. FRAME OPENINGS AS REQUIRED FOR NEW ROOF. EXISTING ROOFTOP MECHANICAL TO REMAIN.
3. REMOVE WINDOW AIR CONDITIONING UNITS.
4. REMOVE SURFACE MOUNT ELECTRICAL / TELEPHONE / DATA / CATV / CABLES AND CONDUITS, SWITCHES AND OUTLETS, UNLESS OTHERWISE NOTED.
5. REMOVE ALL (E) SIDING AND TRIM.
6. REMOVE ALL (E) WINDOWS.
7. REMOVE ALL FLOORING TO STRUCTURAL SLAB.
8. ALL EXISTING GYP BOARD AT WALLS AND CEILINGS TO BE REMOVED EXCEPT AT CLOSETS, LAUNDRY AND STORAGE.

THE SCOPE OF WORK INVOLVED IN THIS PROJECT IS EXEMPT FROM THE DIVISION OF THE STATE ARCHITECT ACCESSIBILITY REQUIREMENTS IN ACCORDANCE WITH TITLE 24, CALIFORNIA CODE OF REGULATIONS, 2019 CALIFORNIA BUILDING CODE.

OFFICE OF THE STATE FIRE MARSHAL
APPROVED FIRE AND PANIC ONLY
6/23/2026
25-3083
SINCE 1885
Approval of this plan does not authorize or approve any omission or deviation from applicable regulations. Final approval is subject to field inspection. One set of approved plans shall be available on the project site at all times.

DGS GENERAL SERVICES
Department of General Services
Architecture & Engineering Sections
State of California
Real Estate Services Division
Project Management & Development Branch
707 Third Street, Suite 4-105
West Sacramento, California 95605

LICENSED ARCHITECT
David Michael Solomon
C22706
REN. 09/30/2025
STATE OF CALIFORNIA

Issue No.	Date	Description
1	08/06/25	
2	06/24/26	

Project
STAFF RESIDENCES REHABILITATION

26501 AVENUE 140
PORTERVILLE, TULARE COUNTY
CA 93257

DEVELOPMENTAL SERVICES

Supervisor	Designed	Drawn
D.S.	E. K.	E. K.

DSA App No.	SFM Permit No.
N/A	25-S-3083-C-

Sheet Title
DUPLEX DEMOLITION FLOOR PLAN BLDG 100

Project Number
000000000006803

Reference North | Sheet Scale

Sheet Number
AC10

ISSUE DATE: OCTOBER 28, 2026

Copyright © 2021, California Department of General Services- Real Estate Services Division

X:\Projects\00xxxx\006803\RVT\ARC\006803_ARC_CENTRAL_BLDG 100.rvt
6/22/2026 8:23:28 AM

DOOR SCHEDULE

DOOR	LOCATION	SIZE (W x H)	THICK	(N) OR (E)	MATERIAL	NEW HARDWARE	HARDWARE GROUP	REMODEL STATUS
D-1	ENTRY	3'-0" x 6'-8"	1 3/4"	(E)	SOLID WD.	YES	1	A
D-2	LIVING ROOM	9'-5 13/16" x 6'-9 3/8"	1 3/4"	(N)	2 PANEL SLIDER	YES	MNF	C
D-3	KITCHEN	2'-8" x 6'-8"	1 3/4"	(N)	SOLID WD.	YES	3	B, D
D-4	KITCHEN	3'-0" x 6'-8"	1 3/8"	(E)	H.C. WD.	YES	N/A	A
D-5	CLOSET	2'-6" x 6'-8"	1 3/4"	(E)	WD+GLASS	YES	6	A
D-6	BEDROOM 1	2'-8" x 6'-8"	1 3/8"	(E)	H.C. WD.	YES	5	A
D-7	CLOSET	5'-0" x 6'-8"	1 3/8"	(E)	DBL. H.C. WD.	YES	6	A
D-8	HALL	2'-8" x 6'-8"	1 3/8"	(E)	H.C. WD.	YES	6	A
D-9	BATH	2'-6" x 6'-8"	1 3/8"	(E)	H.C. WD.	YES	5	A
D-10	CLOSET	2'-6" x 6'-8"	1 3/8"	(E)	H.C. WD.	YES	6	A
D-11	BEDROOM 2	2'-8" x 6'-8"	1 3/8"	(E)	H.C. WD.	YES	5	A
D-12	CLOSET	5'-0" x 6'-8"	1 3/8"	(E)	DBL. H.C. WD.	YES	6	A
D-13	BEDROOM 3	2'-8" x 6'-8"	1 3/8"	(E)	H.C. WD.	YES	5	A
D-14	CLOSET	6'-0" x 6'-8"	1 3/8"	(E)	DBL. H.C. WD.	YES	6	A
D-15	STORAGE RM	2'-4" x 6'-8"	1 3/8"	(N)	SOLID WD.	YES	10	A
D-16	LAUNDRY	2'-8" x 6'-8"	1 3/8"	(E)	H.C. WD.	YES	9	A
D-17	CARPORT	3'-0" x 6'-8"	1 3/4"	(E)	SOLID WD.	YES	10	A
D-18	STORAGE RM	2'-8" x 6'-8"	1 3/4"	(E)	SOLID WD.	YES	10	A
D-19	ENTRY	3'-0" x 6'-8"	1 3/4"	(E)	SOLID WD.	YES	1	A
D-20	LIVING ROOM	12'-6 13/16" x 6'-9 3/8"	1 3/4"	(N)	2 PANEL SLIDER	YES	MNF	C
D-21	KITCHEN	2'-8" x 6'-8"	1 3/4"	(N)	WD. + GLASS	YES	3	B, D
D-22	CLOSET	5'-0" x 6'-8"	1 3/8"	(E)	DBL. H.C. WD.	YES	6	A
D-23	HALL	2'-8" x 6'-8"	1 3/8"	(E)	H.C. WD.	YES	6	A
D-24	BEDROOM 1	2'-8" x 6'-8"	1 3/8"	(E)	H.C. WD.	YES	5	A
D-25	CLOSET	5'-0" x 6'-8"	1 3/8"	(E)	DBL. H.C. WD.	YES	6	A
D-26	CLOSET	1'-6" x 6'-8"	1 3/8"	(E)	H.C. WD.	YES	6	A
D-27	CLOSET	5'-0" x 6'-8"	1 3/8"	(E)	DBL. H.C. WD.	YES	6	A
D-28	BATH	2'-6" x 6'-8"	1 3/8"	(E)	H.C. WD.	YES	5	A
D-29	BEDROOM 2	2'-8" x 6'-0"	1 3/8"	(E)	H.C. WD.	YES	5	A
D-30	CLOSET	8'-0" x 6'-8"	1 3/8"	(E)	DBL. H.C. WD.	YES	6	A

REMODEL STATUS KEY NOTES

A. EXISTING WOOD DOOR TO BE CLEANED, REPAIRED AS REQUIRED AND REFINISHED

B. PATCH AND PAINT FRAME AFTER REMOVAL OF DOOR AND DOOR HARDWARE

C. INSTALL NEW FRAME FOR NEW SLIDER DOOR / WINDOWS

D. NEW DOORS TO BE FLUSH TYPE

WINDOW SCHEDULE

WINDOW	LOCATION	SIZE (W x H)	TYPE	REMODEL STATUS
W-1	LIVING RM	4'-0" x 3'-0"	SLIDER	1
W-2	KITCHEN	4'-0" x 3'-0"	SLIDER	1
W-3	DINING RM	8'-0" x 3'-0"	DBL. SLIDER	1
W-4	BEDROOM 1	8'-0" x 3'-0"	SLIDER	1
W-5	BEDROOM 2	3'-0" x 3'-0"	SLIDER	1
W-6	BEDROOM 2	8'-0" x 3'-0"	DBL. SLIDER	1
W-7	BEDROOM 3	3'-0" x 3'-0"	SLIDER	1
W-8	BEDROOM 3	8'-0" x 3'-0"	DBL. SLIDER	1
W-9	BATH	3'-0" x 3'-0"	SLIDER	1
W-10	LAUNDRY	3'-0" x 3'-0"	SLIDER	1
W-11	LIVING RM	8'-0" x 3'-0"	SLIDER	1
W-12	KITCHEN	4'-0" x 3'-0"	SLIDER	1
W-13	DINING RM	8'-0" x 3'-0"	DBL. SLIDER	1
W-14	BATH	3'-0" x 3'-0"	SLIDER	1
W-15	BEDROOM 2	3'-0" x 3'-0"	SLIDER	1
W-16	BEDROOM 2	8'-0" x 3'-0"	DBL. SLIDER	1
W-17	BEDROOM 1	3'-0" x 3'-0"	SLIDER	1
W-18	BEDROOM 1	8'-0" x 3'-0"	DBL. SLIDER	1

REMODEL STATUS KEY NOTES

1. EXISTING WINDOW TO BE REPLACED

INTERIOR FINISH SCHEDULE

ROOM	FLOOR FINISH	BASE FINISH	WALL FINISH	CEILING FINISH
LIVING / DINING ROOM	VINYL PLANKS	PAINT NEW WOOD	PAINT GYP. BD.	PAINT GYP. BD.
KITCHEN	VINYL PLANKS	NEW 4" RUBBER BASE	PAINT GYP. BD.	PAINT GYP. BD.
HALL	VINYL PLANKS	PAINT NEW WOOD	PAINT GYP. BD.	PAINT GYP. BD.
HALL CLOSET	VINYL PLANKS	PAINT (E) WOOD	PAINT EXISTING GYP. BD.	PAINT EXISTING GYP. BD.
HVAC CLOSET	(E) CONCRETE	PAINT (E) WOOD	PAINT EXISTING GYP. BD.	PAINT EXISTING GYP. BD.
BATH	SHEET VINYL	CERAMIC TILE	TILE / PAINT GYP. BD.	PAINT GYP. BD.
HALL LINEN	VINYL PLANKS	PAINT (E) WOOD	PAINT EXISTING GYP. BD.	PAINT EXISTING GYP. BD.
BEDROOM 1	VINYL PLANKS	PAINT NEW WOOD	PAINT GYP. BD.	PAINT GYP. BD.
BR 1 CLOSET	VINYL PLANKS	PAINT (E) WOOD	PAINT EXISTING GYP. BD.	PAINT EXISTING GYP. BD.
BEDROOM 2	VINYL PLANKS	PAINT NEW WOOD	PAINT GYP. BD.	PAINT GYP. BD.
BR 2 CLOSET	VINYL PLANKS	PAINT (E) WOOD	PAINT EXISTING GYP. BD.	PAINT EXISTING GYP. BD.
BEDROOM 3	VINYL PLANKS	PAINT NEW WOOD	PAINT GYP. BD.	PAINT GYP. BD.
BR 3 CLOSET	VINYL PLANKS	PAINT (E) WOOD	PAINT EXISTING GYP. BD.	PAINT EXISTING GYP. BD.
CLOSET	VINYL PLANKS	PAINT (E) WOOD	PAINT EXISTING GYP. BD.	PAINT EXISTING GYP. BD.
LAUNDRY	(E) CONCRETE	PAINT (E) WOOD	PAINT EXISTING GYP. BD.	PAINT EXISTING GYP. BD.
STORAGE 1	(E) CONCRETE	PAINT (E) WOOD	PAINT EXISTING GYP. BD.	PAINT EXISTING GYP. BD.
STORAGE 2	(E) CONCRETE	PAINT (E) WOOD	PAINT EXISTING GYP. BD.	PAINT EXISTING GYP. BD.

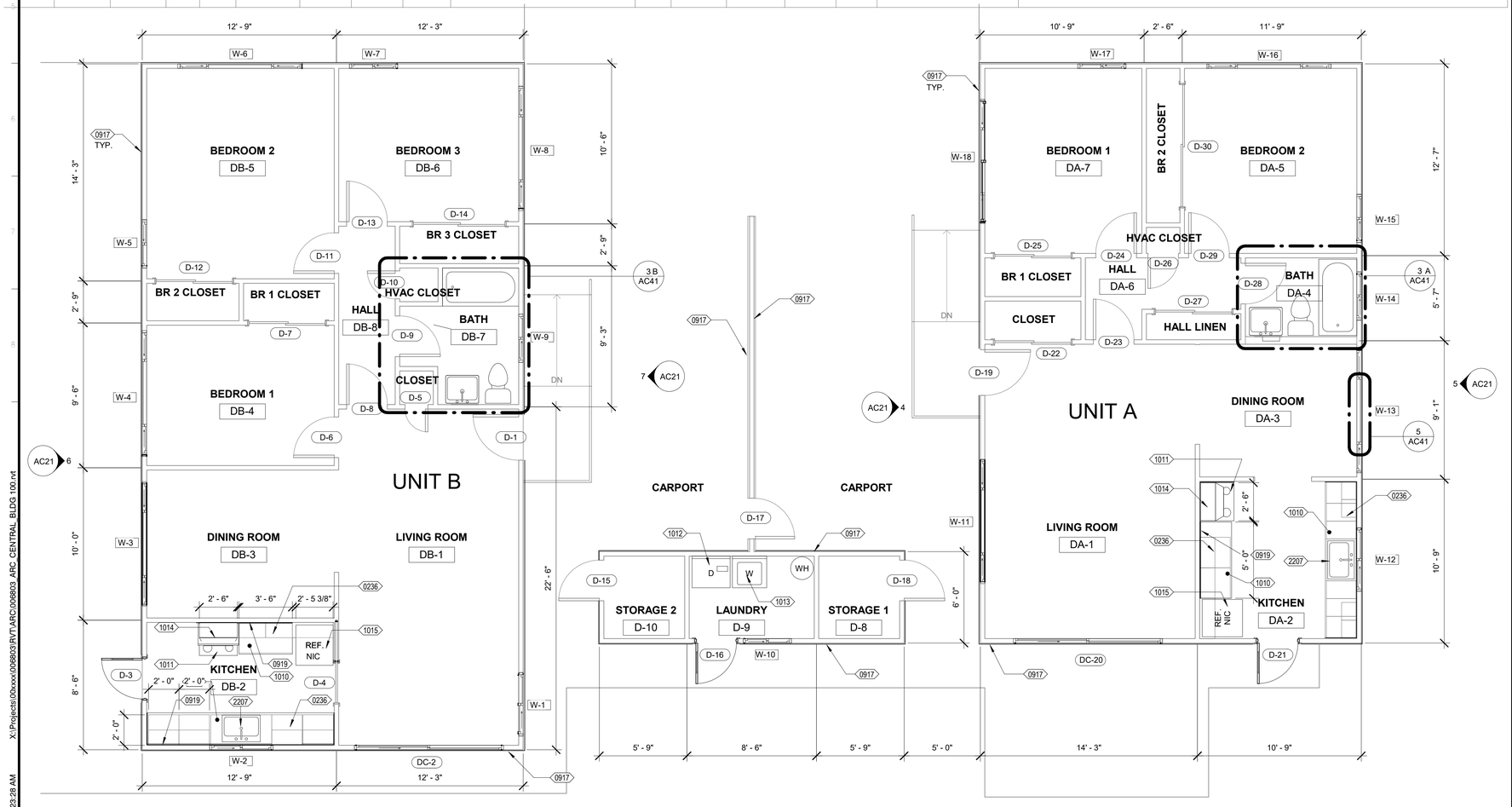

LEGEND

- SINGLE DOOR AND TRIM, TYP.
- SLIDING WINDOW, TYP.
- WH — WATER HEATER
- TUB PER PLUMBING
- TOILET PER PLUMBING
- SINK PER PLUMBING
- WASHER & DRYER BY CONTRACTOR

KEYNOTES FLOOR PLAN

Key Value	Keynote Text
0236	EXISTING STEEL CABINETS TO REMAIN
0917	COMPOSITION SIDING
0919	BACK SPLASH TILE
1010	SOLID COUNTERTOP
1011	RANGE
1012	ELECT. DRYER
1013	WASHER
1014	MICROWAVE HOOD COMBINATION
1015	REFRIGERATOR
2207	KITCHEN SINK

GENERAL NOTES

1. PATCH INTERIOR WALLS AT CLOSETS, LAUNDRY AND STORAGE WITH 1/2" GYPSUM BOARD WITH TEXTURE AND PAINT. ALL OTHER INTERIOR WALLS TO RECEIVE 1/2" GYPSUM BOARD WITH TEXTURE AND PAINT.
2. ALL EXISTING FRAMES TO HAVE HOLES REPAIRED AND TO BE REPAINTED BEFORE NEW GLAZING AND NEW SLIDER WINDOWS ARE INSTALLED.
3. VERIFY ALL DIMENSIONS IN THE FIELD.
4. ALL CLOSET TO BE REPAINT AND REFINISHED. DO NOT REMOVE GYPSUM BOARD, SHELVES, ROD IN THE CLOSETS.
5. MISSING DOORS WILL BE REPLACED, SEE DOOR SCHEDULE FOR INFORMATION.
6. REPAINT ALL EXISTING STEEL CABINETS.
7. BACK SPLASH WRAPS AROUND THE ENDS OF THE COUNTERTOP, AND EXTENDS BEHIND COOKTOP AND COUNTERTOP NEXT TO REFRIGERATOR.

THE SCOPE OF WORK INVOLVED IN THIS PROJECT IS EXEMPT FROM THE DIVISION OF THE STATE ARCHITECT ACCESSIBILITY REQUIREMENTS IN ACCORDANCE WITH TITLE 24, CALIFORNIA CODE OF REGULATIONS, 2019 CALIFORNIA BUILDING CODE.

OFFICE OF THE STATE FIRE MARSHAL
APPROVED FIRE AND PANIC ONLY
6/23/2026
25-3083
SINCE 1885
Approval of this plan does not authorize or approve any omission or deviation from applicable regulations. Final approval is subject to field inspection. One set of approved plans shall be available on the project site at all times.

GENERAL SERVICES
Department of General Services
Architecture & Engineering Sections
State of California
Real Estate Services Division
Project Management & Development Branch
707 Third Street, Suite 4-105
West Sacramento, California 95605

LICENSED ARCHITECT
David Michael Solomon
C22706
REN. 09/30/2025
STATE OF CALIFORNIA

Issue No.	Date	Description
1	08/06/25	
2	06/24/26	

Project
STAFF RESIDENCES REHABILITATION
26501 AVENUE 140
PORTERVILLE, TULARE COUNTY
CA 93257

DEVELOPMENTAL SERVICES

Supervisor	Designed	Drawn
D.S.	E. K.	E. K.

DSA App No. N/A
SFM Permit No. 25-S-3083-C-

Sheet Title
DUPLEX FLOOR PLAN BLDG 100

Project Number
000000000006803

Reference North
Sheet Scale
Sheet Number
AC11

1 DUPLEX - BLDG 100 - FLOOR PLAN

1/4" = 1'-0"

ISSUE DATE: OCTOBER 28, 2026

X:\Projects\00xxxx\006803\RVT\ARC\006803_ARC_CENTRAL_BLDG 100.rvt

6/22/2026 8:23:28 AM

Copyright © 2021, California Department of General Services - Real Estate Services Division

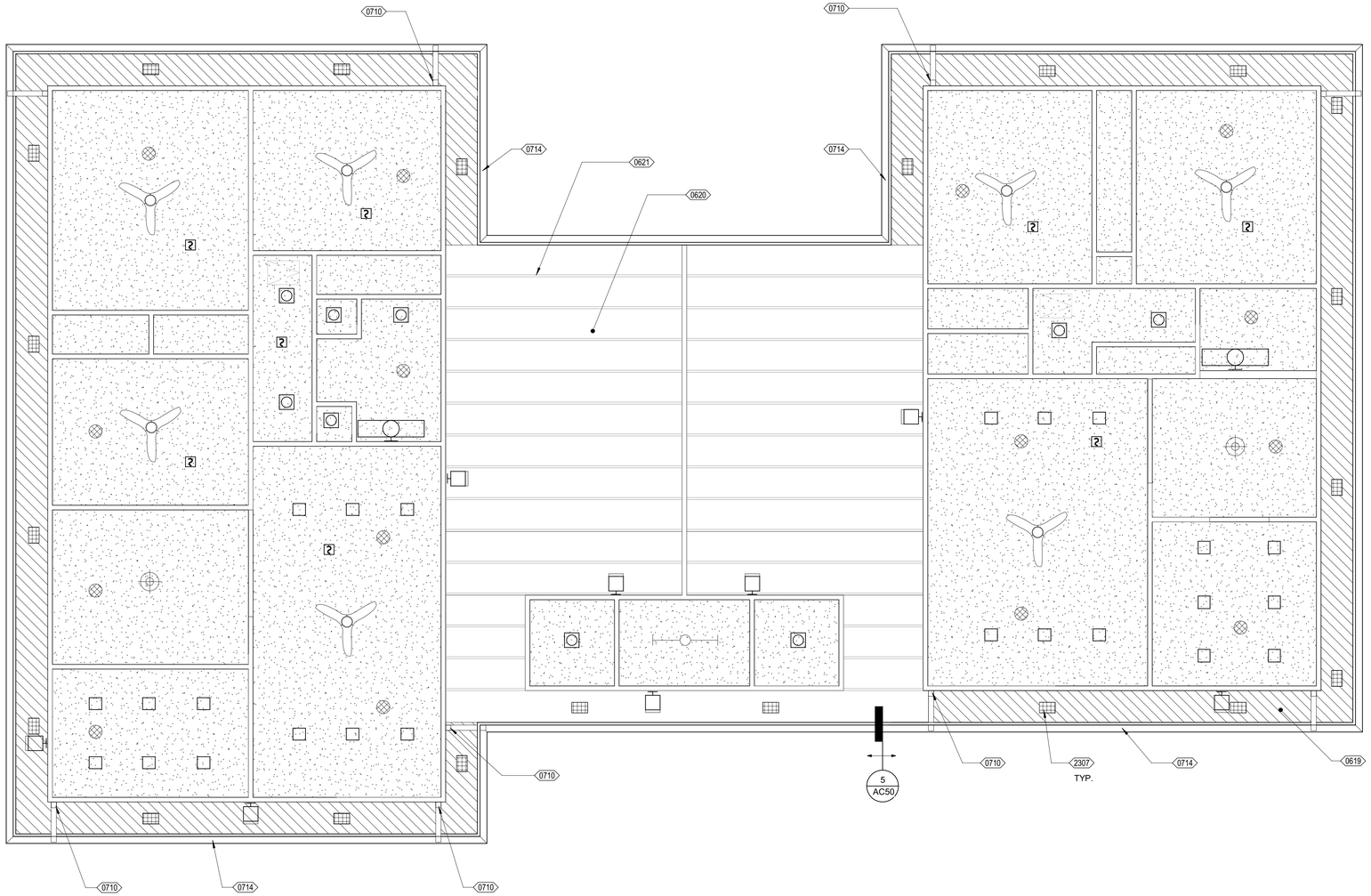

REFLECTED CEILING PLAN LEGEND

- LUMINAIRE, WALL MOUNTED
- STRIP LUMINAIRE, SURFACE OR PENDANT MOUNTED
- ROUND DOWNLIGHT LUMINAIRE, RECESSED IN CEILING
- SQUARE DOWNLIGHT LUMINAIRE, RECESSED IN CEILING
- DOWNLIGHT, SURFACE OR PENDANT MOUNTED
- AREA LUMINAIRE, SURFACE OR RECESSED MOUNTED TO WALL
- DECORATIVE LUMINAIRE, PENDANT MOUNTED
- CEILING FAN
- SMOKE DETECTOR
- REPLACE EXISTING GYPSUM BOARD CEILING WITH NEW 1/2" GYPSUM BOARD CEILING AND PAINT
- PAINT UNDERSIDE OF ROOF DECK
- EXISTING SOFFIT TO REMAIN. REPAIR AND PAINT. SOFFIT AND VENT DETAIL 6/AC41
- (E) 18" x 24" SCUTTLE TO REMAIN
- EXISITNG ROUND DIFFUSERS TO REMAIN

KEYNOTE LEGEND - REFLECTED CEILING PLAN

Key Value	Keynote Text
0619	3/8" PLYWOOD AT ALL SOFFIT EAVES, AND PAINT
0620	REPLACE ROOF SHEATHING WHERE DAMAGED AND PAINT
0621	EXISTING EXPOSED 2x8 JOISTS @ 24" O.C. TO BE PAINTED
0710	2"x3" RECTANGULAR SM DOWNSPOUT. TERMINATE AT SPLASH BLOCK, DETAIL 10/AC51
0714	GUTTER, DETAIL 6/AC41
2307	EXISTING EAVE VENT TO BE REPLACED,TYP. @ 12' O.C.

GENERAL NOTES

1. WHERE OCCURS FOR PATCHING THE CEILING TO RECEIVE 1/2" GYPSUM BOARD WITH TEXTURE AND PAINT.

1 DUPLEX - REFLECTIVE CEILING PLAN — 1/4" = 1'-0"

THE SCOPE OF WORK INVOLVED IN THIS PROJECT IS EXEMPT FROM THE DIVISION OF THE STATE ARCHITECT ACCESSIBILITY REQUIREMENTS IN ACCORDANCE WITH TITLE 24, CALIFORNIA CODE OF REGULATIONS, 2016 CALIFORNIA BUILDING CODE.

OFFICE OF THE STATE FIRE MARSHAL
APPROVED FIRE AND PANIC ONLY
09/29/25
25-3083
Approval of this plan does not authorize or approve any omission or deviation from applicable regulations. Final approval is subject to field inspection. One set of approved plans shall be available on the project site at all times.

DGS GENERAL SERVICES
Department of General Services
Architecture & Engineering Sections
State of California
Real Estate Services Division
Project Management & Development Branch
707 Third Street, Suite 4-105
West Sacramento, California 95605

LICENSED ARCHITECT
David Michael Solomon
C22706
REN.09/30/2025
STATE OF CALIFORNIA

Issue

No.	Date	Description
1	08/06/25	

Project
STAFF RESIDENCES REHABILITATION
26501 AVENUE 140
PORTERVILLE, TULARE COUNTY
CA 93257
DEVELOPMENTAL SERVICES

Supervisor	Designed	Drawn
D.S.	E. K.	E.K.

DSA App No.	SFM Permit No.
N/A	25-S-3083-C-DR

Sheet Title
DUPLEX REFLECTED CEILING PLAN BLDG 100

Project Number
000000000006803

Reference North | Sheet Scale

Sheet Number
AC12

Copyright © 2021, California Department of General Services- Real Estate Services Division

ISSUE DATE: OCTOBER 28, 2026

RELATIVE BORDER SCALE IN INCHES 0 1 2

X:\Projects\00xxxx\006803\RVT\ARC\006803_ARC_CENTRAL_TEST_BLDG 100.rvt
8/25/2025 2:23:07 PM

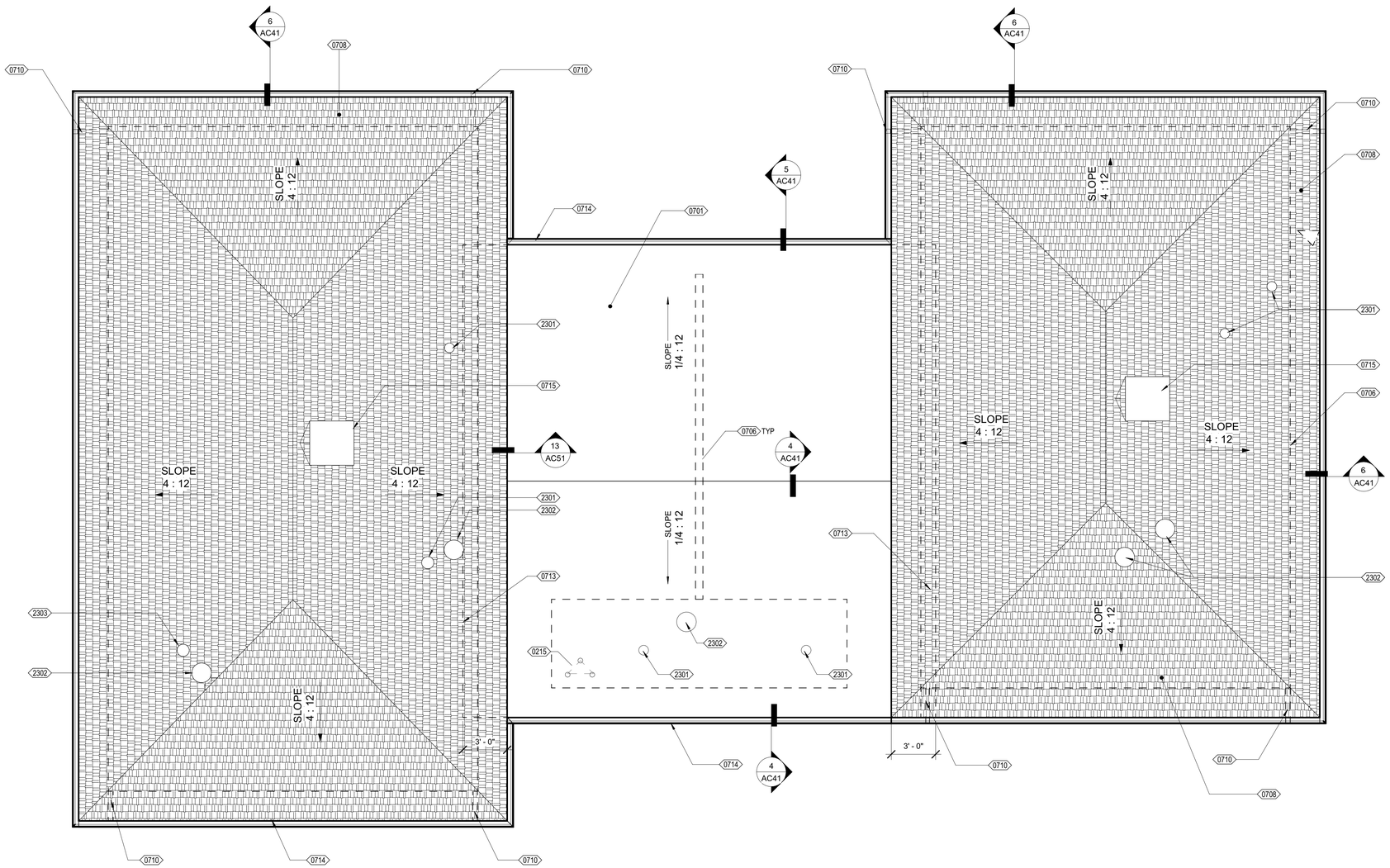

KEYNOTE LEGEND - ROOF	
Key Value	Keynote Text
0215	TRIPOD TO BE REMOVED
0701	PVC SINGLE PLY ROOFING SYSTEM, DETAIL 7/AC50
0706	EXISTING WALL BELOW
0708	COMPOSITION SHINGLES ROOF
0710	2"x3" RECTANGULAR SM DOWNSPOUT. TERMINATE AT SPLASH BLOCK, DETAIL 10/AC51
0713	SINGLE PLY MEMBRANE AT COMPOSITE ROOF, DETAIL 13/A501
0714	GUTTER, DETAIL 6/AC41
0715	REUSE (E) FLASHING AT (E) A.C. UNIT
2301	VENT THROUGH ROOF PER DETAIL 2/AC50, 9/AC50
2302	EXISTING EXHAUST FAN PER DETAIL 2, 9/AC50
2303	EXISTING VENT

GENERAL NOTES

1. REMOVE AND DISCARD ALL EXISTING ROOFING SYSTEM, DOWN TO THE STRUCTURAL DECK. INSPECT EXISTING ROOF DECK AND NOTIFY STATE OF ANY DAMAGE OR DRY ROT.

2. SAVE AND PROTECT ALL PERIMETER WOOD NAILERS. CONDUCT REVIEW OF EXISTING NAILERS WITH STATE INSPECTOR & REPLACE ALL WOOD NOT ACCEPTABLE TO REMAIN. ALL NEW WOOD SHALL BE TREATED FOR ROT RESISTANCE.

3. CONTRACTOR SHALL INSTALL NEW COMPOSITION ROOFING AT SLOPED AREAS AND A NEW PVC SINGLE PLY ROOF SYSTEM, WITH RIGID INSULATION AT FLAT ROOFING AREAS AS SHOWN ON PLAN. VERIFY ROOF DECK CONDITIONS AFTER DEMOLITION AND CONDUCT A JOB-SITE MEETING WITH THE STATE REPRESENTATIVE TO REVIEW AND CONFIRM ALL CONDITIONS ARE READY FOR NEW ROOFING SYSTEM.
CLEAN STRUCTURAL DECK AND APPLY PRIMER TO DECK SURFACES.

4. INSTALL VAPOR RETARDER PER MANUFACTURE'S REQUIREMENTS

5. INSTALL ONE LAYER OF 1-1/2" RIGID INSULATION OVER STRUCTURAL DECK. VERIFY ROOF SLOPE IS MINIMUM 1/4" PER FOOT, INCLUDING CRICKETS.

6. PAINT ALL NEW FLASHING AND METAL TRIM TO MATCH EXISTING METAL TRIM OR FLASHING AT SIMILAR LOCATIONS.

1 DUPLEX - ROOF PLAN — 1/4" = 1'-0"

THE SCOPE OF WORK INVOLVED IN THIS PROJECT IS EXEMPT FROM THE DIVISION OF THE STATE ARCHITECT ACCESSIBILITY REQUIREMENTS IN ACCORDANCE WITH TITLE 24, CALIFORNIA CODE OF REGULATIONS, 2016 CALIFORNIA BUILDING CODE.

OFFICE OF THE STATE FIRE MARSHAL
APPROVED FIRE AND PANIC ONLY
09/29/25
25-3083
Approval of this plan does not authorize or approve any omission or deviation from applicable regulations. Final approval is subject to field inspection. One set of approved plans shall be available on the project site at all times.

DGS GENERAL SERVICES
Department of General Services
Architecture & Engineering Sections
State of California
Real Estate Services Division
Project Management & Development Branch
707 Third Street, Suite 4-105
West Sacramento, California 95605

LICENSED ARCHITECT
David Michael Solomon
C22706
REN.09/30/2025
STATE OF CALIFORNIA

Issue		
No.	Date	Description
1	08/06/25	

Project
STAFF RESIDENCES REHABILITATION

26501 AVENUE 140
PORTERVILLE, TULARE COUNTY
CA 93257

DEVELOPMENTAL SERVICES

Supervisor	Designed	Drawn
D.S.	E. K.	E. K.
DSA App No.	SFM Permit No.	
N/A	25-S-3083-C-DR	

Sheet Title
DUPLEX ROOF PLAN
BLDG 100

Project Number
000000000006803

Reference North | Sheet Scale

Sheet Number
AC13

© Copyright © 2021, California Department of General Services: Real Estate Services Division

ISSUE DATE: OCTOBER 28, 2026

RELATIVE BORDER SCALE IN INCHES 0 1 2

X:\Projects\00xxxx\006803\RVT\ARC006803_ARC_CENTRAL_TEST_BLDG 100.rvt
8/25/2025 2:09:38 PM

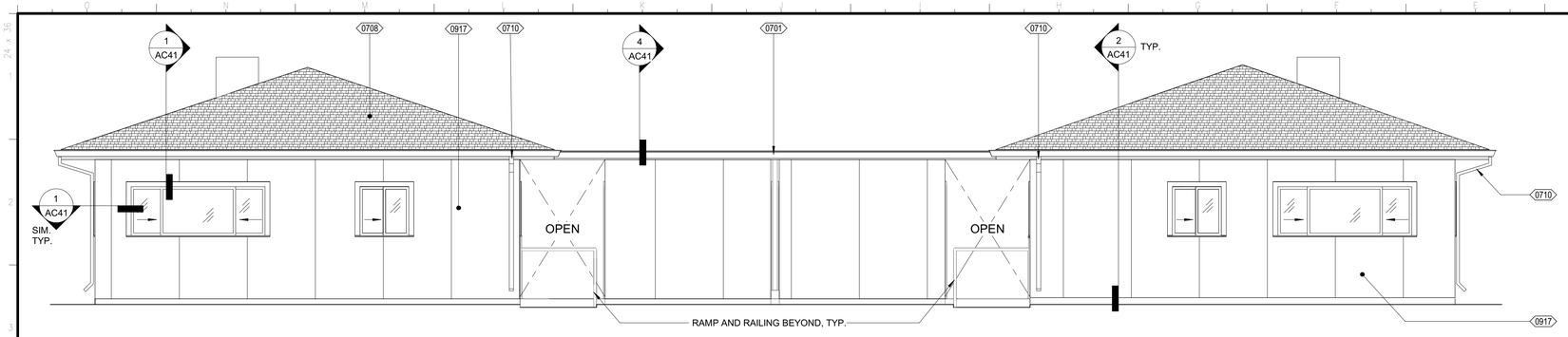

1 DUPLEX - NORTH ELEVATION

1/4" = 1'-0"

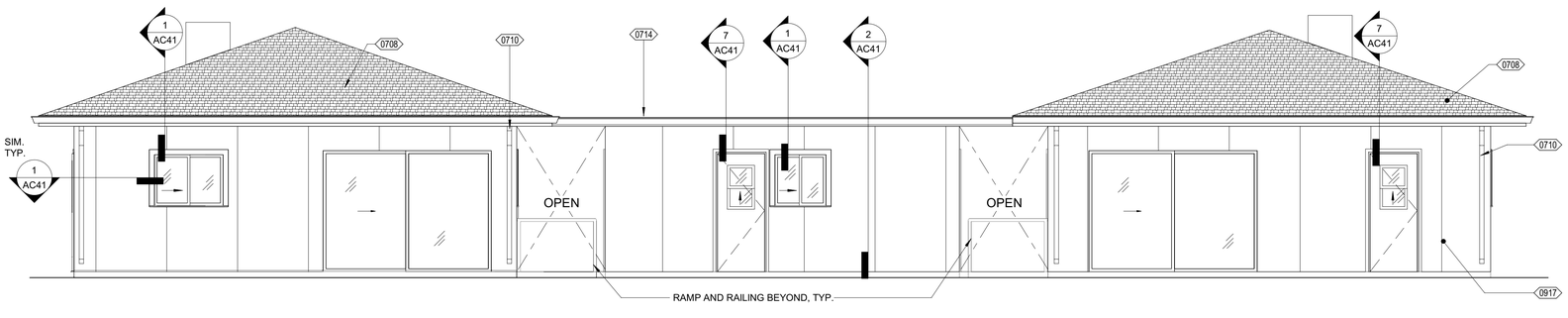

2 DUPLEX - SOUTH ELEVATION

1/4" = 1'-0"

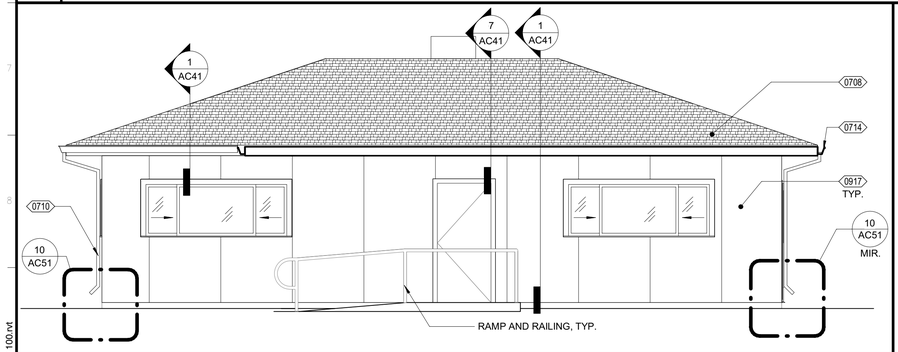

4 DUPLEX - WEST ELEVATION UNIT A

1/4" = 1'-0"

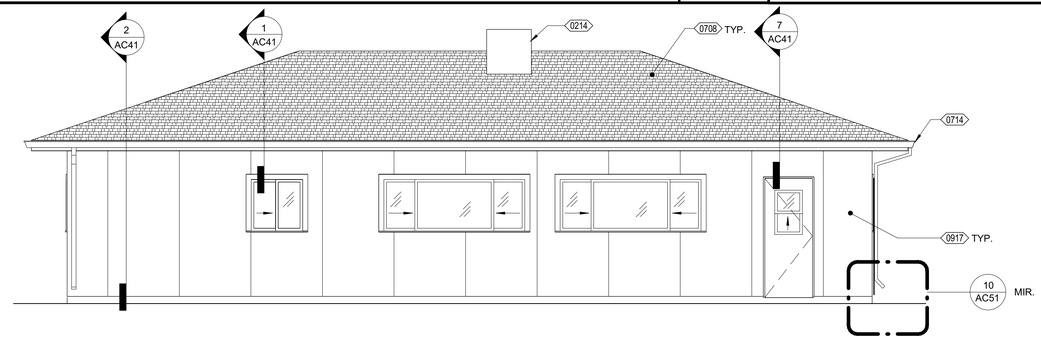

6 DUPLEX - WEST ELEVATION UNIT B

1/4" = 1'-0"

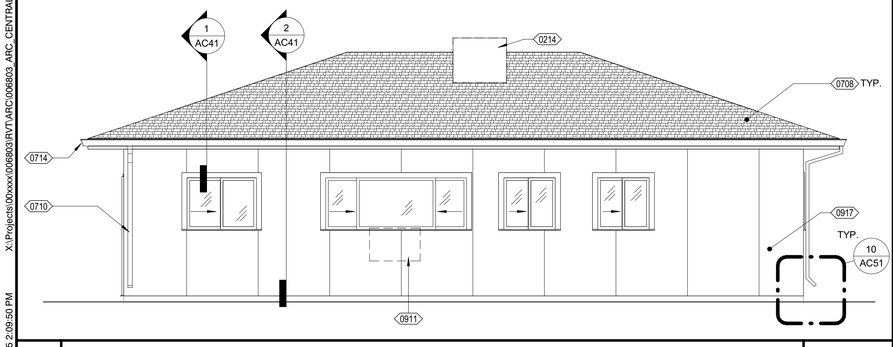

5 DUPLEX - EAST ELEVATION UNIT A

1/4" = 1'-0"

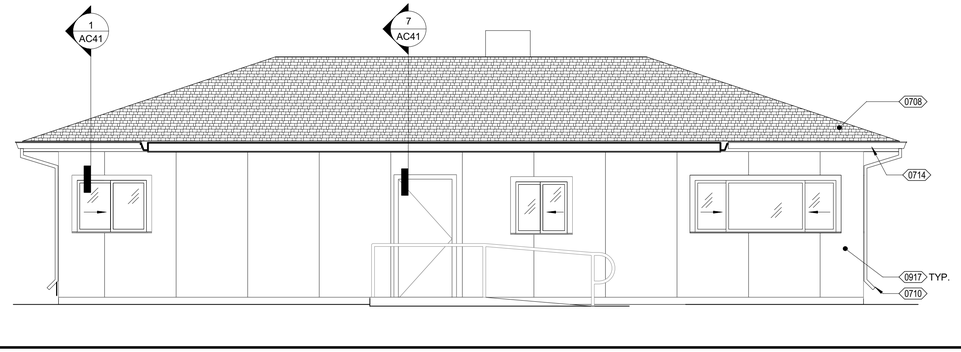

7 DUPLEX - EAST ELEVATION UNIT B

1/4" = 1'-0"

KEYNOTE LEGEND - EXTERIOR ELEVATIONS

Key Value	Keynote Text
0214	EXISTING MECHANICAL UNIT TO REMAIN
0701	PVC SINGLE PLY ROOFING SYSTEM, DETAIL 7/AC50
0708	COMPOSITION SHINGLES ROOF
0710	2"x3" RECTANGULAR SM DOWNSPOUT. TERMINATE AT SPLASH BLOCK, DETAIL 10/AC51
0714	GUTTER, DETAIL 6/AC41
0911	INFILL WALL OPENING IN EXTERIOR WALL, SEE DETAIL 5/AC41
0917	COMPOSITION SIDING

GENERAL NOTES

1. INSTALL NEW CEMENT FIBER SIDING AND PAINT.

THE SCOPE OF WORK INVOLVED IN THIS PROJECT IS EXEMPT FROM THE DIVISION OF THE STATE ARCHITECT ACCESSIBILITY REQUIREMENTS IN ACCORDANCE WITH TITLE 24, CALIFORNIA CODE OF REGULATIONS, 2016 CALIFORNIA BUILDING CODE.

OFFICE OF THE STATE FIRE MARSHAL
APPROVED FIRE AND PANIC ONLY
09/29/25
25-3083
Approval of this plan does not authorize or approve any omission or deviation from applicable regulations. Final approval is subject to field inspection. One set of approved plans shall be available on the project site at all times.

DGS GENERAL SERVICES
Department of General Services
Architecture & Engineering Sections
State of California
Real Estate Services Division
Project Management & Development Branch
707 Third Street, Suite 4-105
West Sacramento, California 95605

LICENSED ARCHITECT
David Monroe Salomon
C22706
REN.09/30/2025
STATE OF CALIFORNIA

Issue No.	Date	Description
1	08/06/25	

Project
STAFF RESIDENCES REHABILITATION
26501 AVENUE 140
PORTERVILLE, TULARE COUNTY
CA 93257
DEVELOPMENTAL SERVICES

Supervisor	Designed	Drawn
D.S.	E. K.	E. K.

DSA App No.	SFM Permit No.
N/A	25-S-3083-C-DR

Sheet Title
DUPLEX EXTERIOR ELEVATION BLDG 100

Project Number
000000000006803

Sheet Scale

Sheet Number
AC21

Copyright © 2021, California Department of General Services-Real Estate Services Division

ISSUE DATE: OCTOBER 28, 2026

X:\Projects\00xxxx\006803\RVT\ARC\006803_ARC_CENTRAL_TEST_BLDG 100.rvt
8/25/2025 2:09:50 PM

RELATIVE BORDER SCALE IN INCHES 0 1 2 3

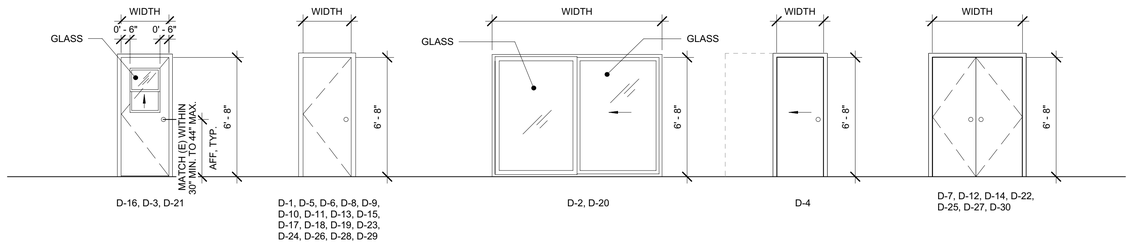

1 DOOR TYPES — 1/4" = 1'-0"

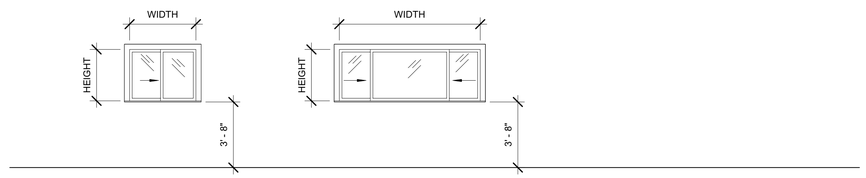

2 WINDOW TYPES — 1/4" = 1'-0"

THE SCOPE OF WORK INVOLVED IN THIS PROJECT IS EXEMPT FROM THE DIVISION OF THE STATE ARCHITECT ACCESSIBILITY REQUIREMENTS IN ACCORDANCE WITH TITLE 24, CALIFORNIA CODE OF REGULATIONS, 2016 CALIFORNIA BUILDING CODE.

OFFICE OF THE STATE FIRE MARSHAL
APPROVED FIRE AND PANIC ONLY
09/29/25
25-3083
Approval of this plan does not authorize or approve any omission or deviation from applicable regulations. Final approval is subject to field inspection. One set of approved plans shall be available on the project site at all times.

Department of General Services
Architecture & Engineering Sections
State of California
Real Estate Services Division
Project Management & Development Branch
707 Third Street, Suite 4-105
West Sacramento, California 95605

LICENSED ARCHITECT
David Michael Solomon
C22706
REN:09/30/2025
STATE OF CALIFORNIA

Issue		
No.	Date	Description
1	08/06/25	

Project
STAFF RESIDENCES REHABILITATION
26501 AVENUE 140
PORTERVILLE, TULARE COUNTY
CA 93257

DEVELOPMENTAL SERVICES

Supervisor	Designed	Drawn
D.S.	E. K.	E.K.

DSA App No.	SFM Permit No.
N/A	25-S-3083-C-DR

Sheet Title
DOOR AND WINDOW TYPES SCHEDULES BLDG 100

Project Number
000000000006803

Sheet Scale

Sheet Number
AC31

Copyright © 2021, California Department of General Services- Real Estate Services Division

ISSUE DATE: OCTOBER 28, 2026

RELATIVE BORDER SCALE IN INCHES 0 1 2 3

X:\Projects\00xxxx\006803\RVT\ARC\006803_ARC_CENTRAL_TEST_BLDG 100.rvt
8/25/2025 2:09:53 PM

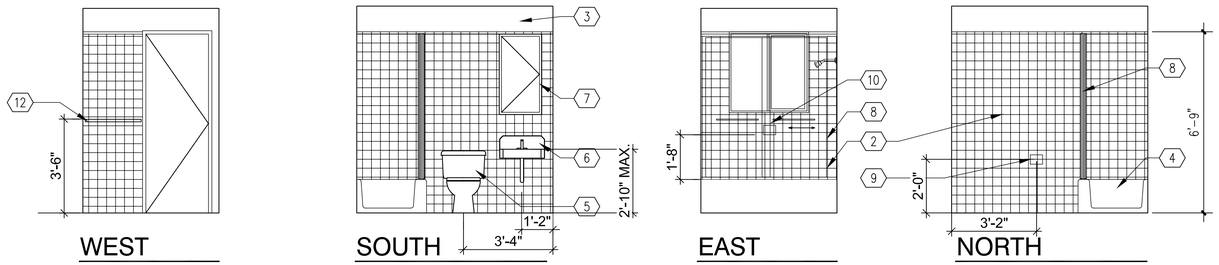

DUPLEX - 2 BEDROOM UNIT

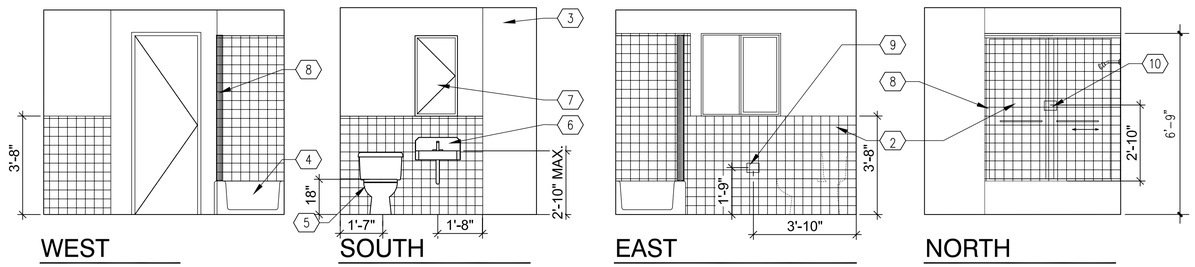

DUPLEX - 3 BEDROOM UNIT

5 DUPLEX BATHROOM - INTERIOR ELEVATIONS — 3/8"=1'-0"

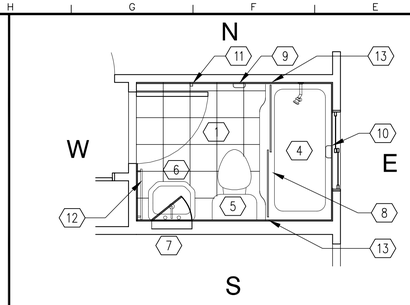

3B - 2 BEDROOM BATH

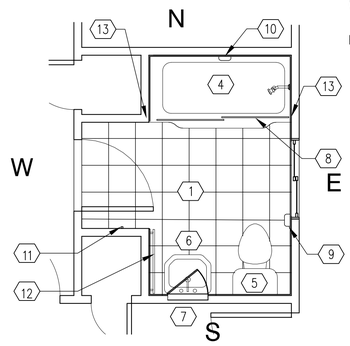

3A - 3 BEDROOM BATH

3 BATHROOM - ENLG PLAN — 3/8"=1'-0"

KEY NOTE LEGEND

1. VINYL FLOORING – 12" TILES
2. CERAMIC TILE
3. ½" GYP GREEN BOARD, TEXTURED AND PAINTED, TYP.
4. REMOVE AND REINSTALL EXISTING TUB, SEE PLUMBING DRAWINGS
5. REMOVE AND REINSTALL EXISTING TOILET, SEE PLUMBING DRAWINGS
6. REMOVE AND REINSTALL EXISTING SINK TO REPLACE GYP. BOARD, SEE PLUMBING DRAWINGS
7. RECESSED 18" X 36" MIRROR/MEDICINE CABINET CENTERED OVER SINK, MODIFY FRAMING TO PROVIDE NEW OPENING IN WALL
8. GLASS SLIDING SHOWER DOORS WITH TOWER BAR / SLIDING DOOR PULL. PROVIDE BLOCKING FOR HEADER TRACK TO (E) WOOD FRAME WALLS.
9. PORCELAIN TOILET PAPER HOLDER
10. PORCELAIN SOAP HOLDER
11. ROBE HOOK
12. TOWEL BAR
13. PROVIDE BLOCKING IN WALLS FOR SHOWER DOOR TRACK

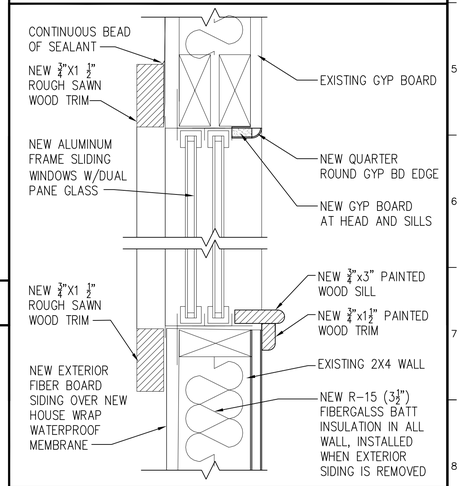

1 DUPLEX WINDOWS — 3" = 1'-0"

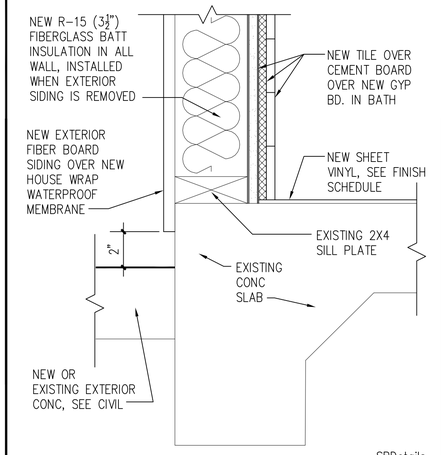

SPDetails

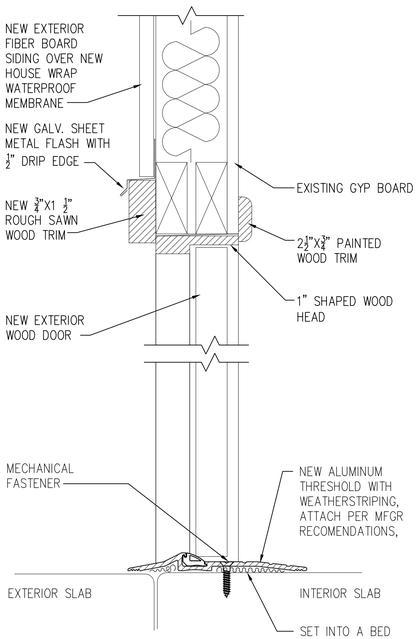

7 DUPLEX EXT DOORS — 3" = 1'-0"

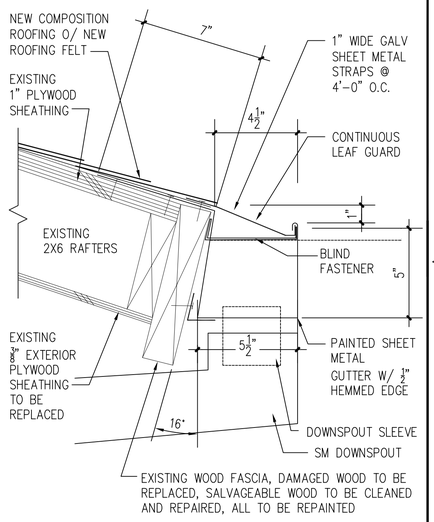

6 ROOF EAVE — N.T.S.

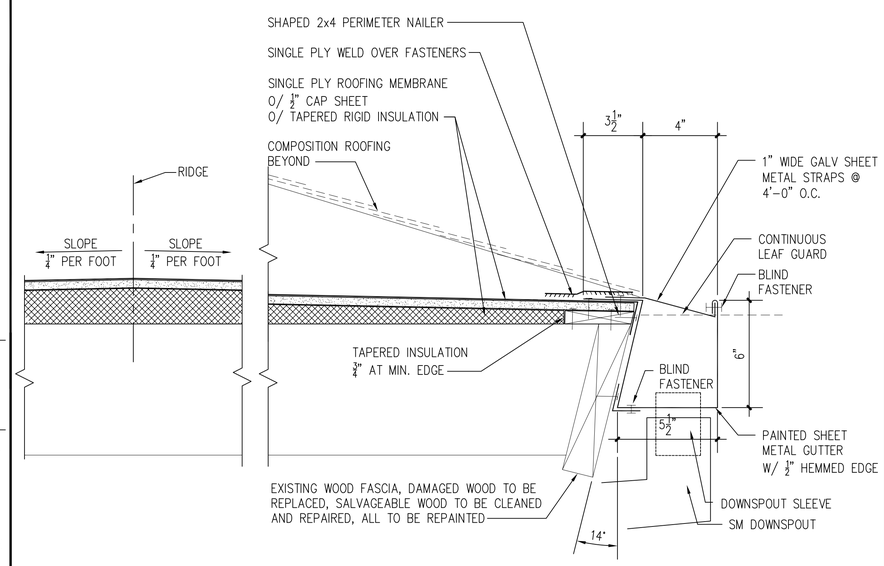

4 SINGLE PLY ROOF @ CARPORT — N.T.S.

2 EXTERIOR WALL SILL — 3"=1'-0"

OFFICE OF THE STATE FIRE MARSHAL
APPROVED FIRE AND PANIC ONLY
09/29/25
25-3083
Approval of this plan does not authorize or approve any omission or deviation from applicable regulations. Final approval is subject to field inspection. One set of approved plans shall be available on the project site at all times.

DGS GENERAL SERVICES

Department of General Services
Architecture & Engineering Sections
State of California
Real Estate Services Division
Project Management & Development Branch
707 Third Street, Suite 4-105
West Sacramento, California 95605

LICENSED ARCHITECT
David Monroe Solomon
C22706
REN.09/30/2025
STATE OF CALIFORNIA

Issue		
No.	Date	Description
1	8/06/25	

Project
STAFF RESIDENCES REHABILITATION
26501 AVENUE 140
PORTERVILLE, CA 93257
DEVELOPMENTAL SERVICES

Supervisor	Designed	Drawn
D. S.	E. K.	E. K.
DSA App No.		SFM Permit No.
N/A		25-S-3083-C-DR

Sheet Title
INTERIOR ELEVATIONS, PLANS AND DETAILS BLDG 100

Project Number
000000000006803

Reference North | Sheet Scale: AS NOTED | Sheet Number: AC41 of

ISSUE DATE: OCTOBER 28, 2026

Copyright © 2020, California Department of General Services - Real Estate Services Division

CAD File: X:\Projects\00xxxx006803\DWG\PLTAC41.dwg Plot Date: Aug 25, 2025 - 1:32pm Plotted by: ekellgen

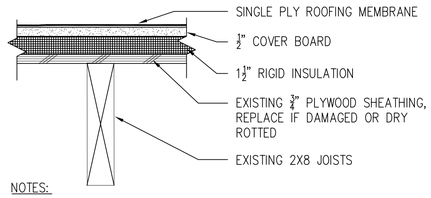

NOTES:

1) NAILERS SHALL BE SECURELY ANCHORED TO THE DECK WITH ¼" DIA. SCREWS @ 32" O.C WITH 1-1/4" MIN. EMBEDMENT, TYPICAL.
2) THE THICKNESS OF THE NAILER SHALL MATCH THE HEIGHT OF THE INSULATION OR SURFACE TO WHICH THE MEMBRANE IS TO BE APPLIED.
3) VAPOR BARRIER SHALL BE SEALED AT EDGES.
4) CONTINUOUS CLEAT IS REQUIRED IF FACE DIMENSION OF FASCIA EXCEEDS 3 INCHES.
5) FACE DIMENSION OF FASCIA SHALL BE A MINIMUM OF 4 INCHES
6) THE HORIZONTAL FLANGE OF THE METAL EDGE SHALL NOT EXTEND BEYOND THE WOOD NAILER.
7) TOP OF EDGE FLASHING SHALL BE LEVEL WITH ROOF EDGE, TYPICAL.

7 SINGLE PLY GENERAL NOTES

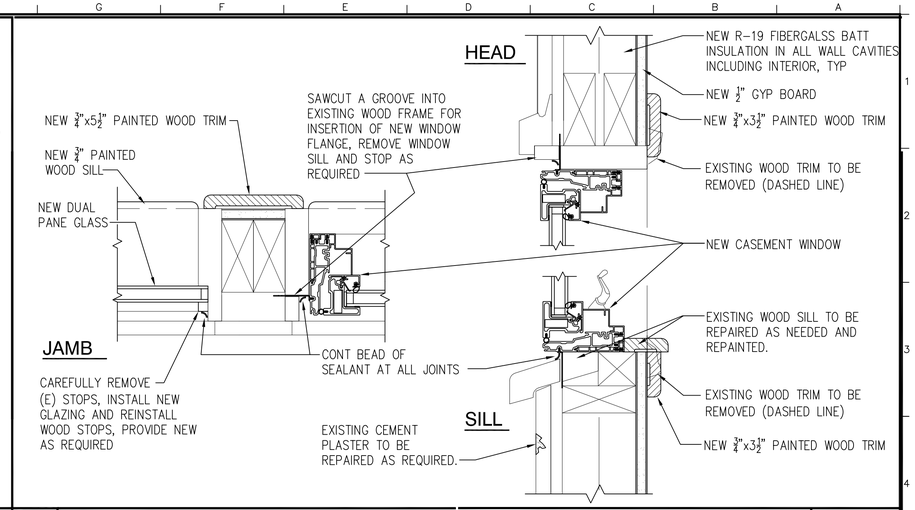

1 CASEMENT WINDOW

3" = 1'-0"

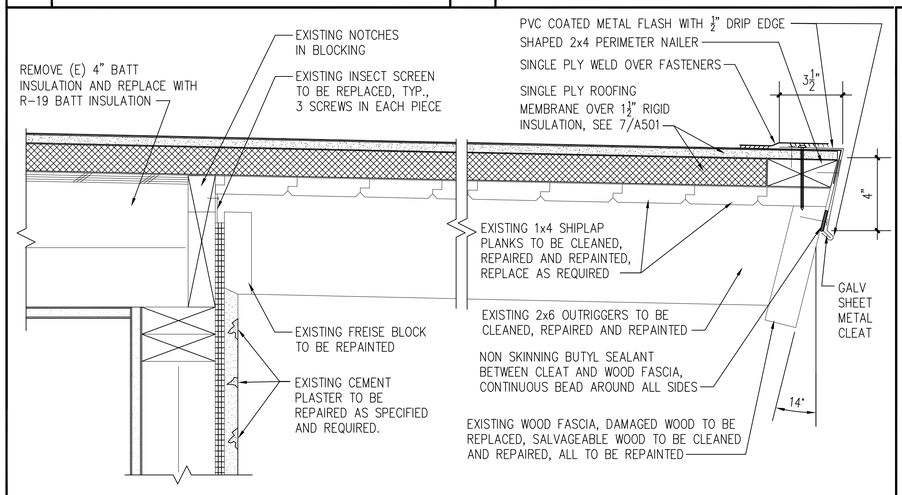

5 ROOF EAVE/FASCIA

N.T.S.

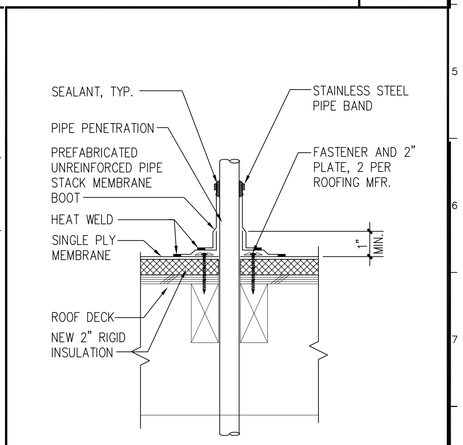

2 ROOF PENETRATION

N.T.S.

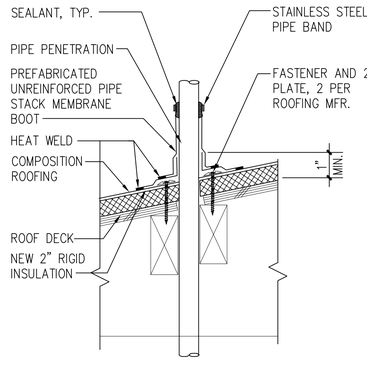

9 ROOF PENETRATION

N.T.S.

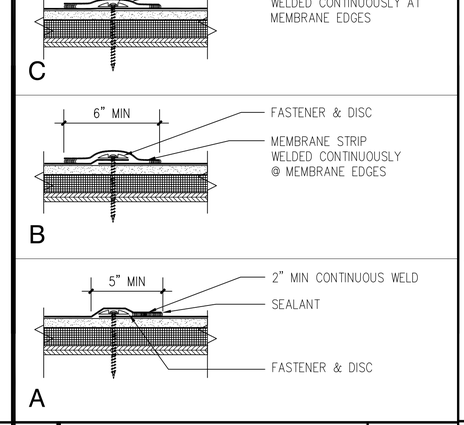

6 SINGLE PLY WELDS

3"=1'-0"

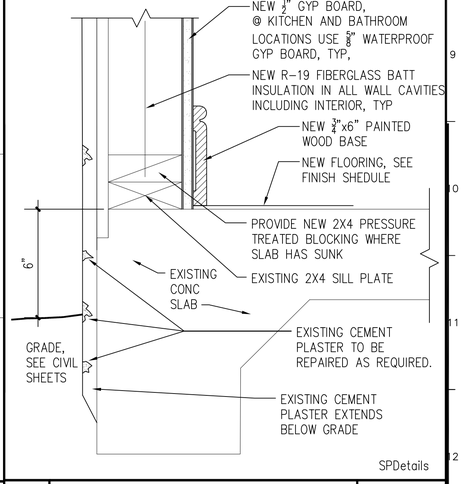

3 EXTERIOR WALL SILL

3"=1'-0"

OFFICE OF THE STATE FIRE MARSHAL
APPROVED FIRE AND PANIC ONLY
09/29/25
25-3083
Approval of this plan does not authorize or approve any omission or deviation from applicable regulations. Final approval is subject to field inspection. One set of approved plans shall be available on the project site at all times.

GENERAL SERVICES
Department of General Services
Architecture & Engineering Sections
State of California
Real Estate Services Division
Project Management & Development Branch
707 Third Street, Suite 4-105
West Sacramento, California 95605

LICENSED ARCHITECT
David Michael Sprigmon
C22706
REN:09/30/2025
STATE OF CALIFORNIA

Issue No.	Date	Description
1	8/06/25	

Project
STAFF RESIDENCES REHABILITATION
26501 AVENUE 140
PORTERVILLE, CA 93257
DEVELOPMENTAL SERVICES

Supervisor	Designed	Drawn
D. S.	E. K.	E. K.

DSA App No.	SFM Permit No.
N/A	25-S-3083-C-DR

Sheet Title
VARIOUS DETAILS BLDG 100

Project Number
00000000006803

Reference North	Sheet Scale	Sheet Number
	AS SHOWN	AC50 of

Copyright © 2020, California Department of General Services - Real Estate Services Division

ISSUE DATE: OCTOBER 28, 2026

CAD File: X:\Projects\00xxxx\006803\DWG\PLTAC50 VARIOUS DETAILS UNIT 100.dwg Plot Date: Aug 25, 2025 - 1:33pm Plotted by: ekellgen

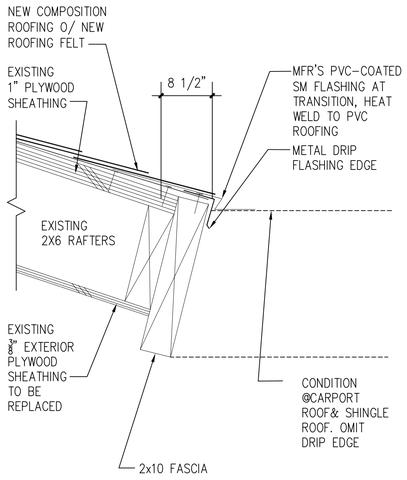

13 ROOF EAVE CARPORT

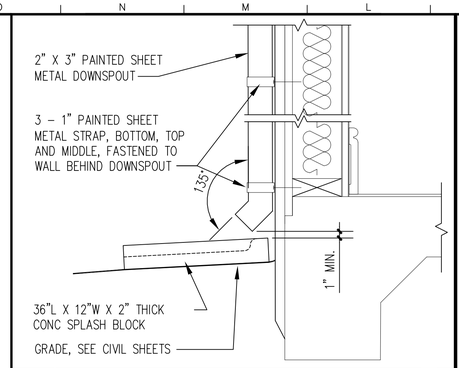

10 DOWNSPOUT 3"=1'-0"

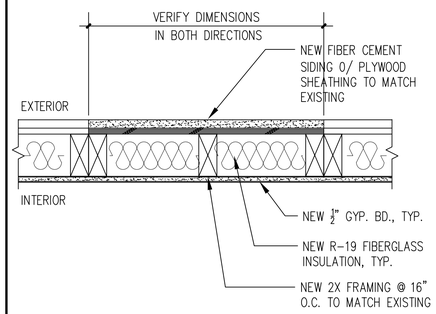

11 INFILL FRAMING 1/2"=1'-0"

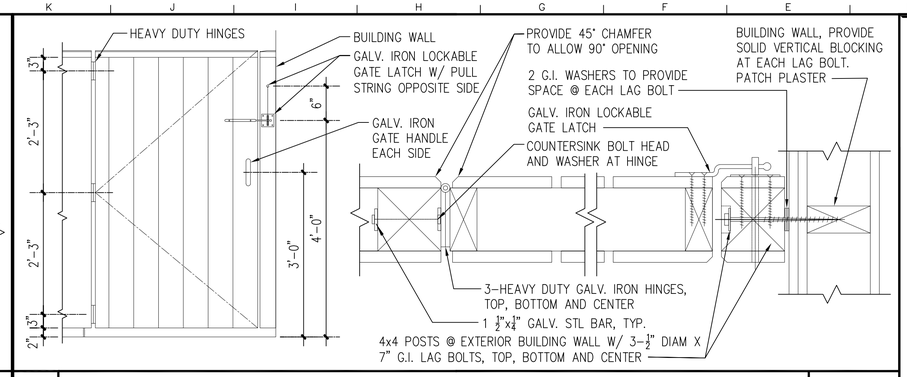

4 GATE ELEVATION AND DETAIL

8 DETAIL NOT USED N.T.S.

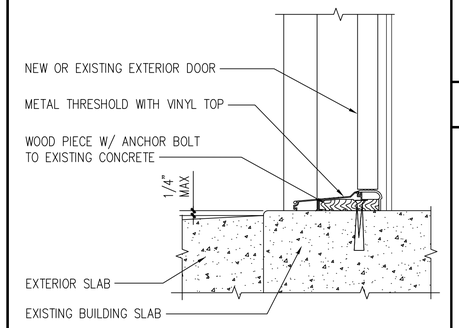

5 THRESHOLD DETAIL 3"=1'-0"

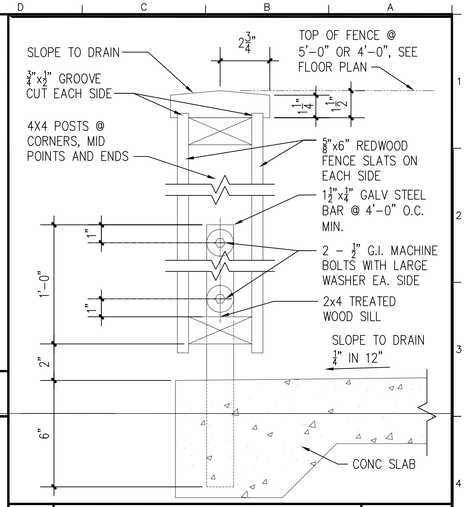

1 FENCE DETAIL

2 DETAIL NOT USED N.T.S.

OFFICE OF THE STATE FIRE MARSHAL
APPROVED FIRE AND PANIC ONLY
09/29/25
25-3083
Approval of this plan does not authorize or approve any omission or deviation from applicable regulations. Final approval is subject to field inspection. One set of approved plans shall be available on the project site at all times.

DGS GENERAL SERVICES

Department of General Services
Architecture & Engineering Sections
State of California
Real Estate Services Division
Project Management & Development Branch
707 Third Street, Suite 4-105
West Sacramento, California 95605

LICENSED ARCHITECT
David Michael Simpson
C22706
REN:09/30/2025
STATE OF CALIFORNIA

Issue		
No.	Date	Description
1	8/06/25	

Project
STAFF RESIDENCES REHABILITATION

26501 AVENUE 140
PORTERVILLE, CA 93257

DEVELOPMENTAL SERVICES

Supervisor	Designed	Drawn
D. S.	E. K.	E. K.

DSA App No.	SFM Permit No.
N/A	25-S-3083-C-DR

Sheet Title
VARIOUS DETAILS BLDG 100

Project Number
000000000006803

Reference North

Sheet Scale
AS SHOWN

Sheet Number
AC51
of

Copyright © 2020, California Department of General Services - Real Estate Services Division

ISSUE DATE: OCTOBER 28, 2026

CAD File: X:\Projects\00xxxx\006803\DWG\PLTVAC51 VARIOUS DETAILS UNIT 100.dwg Plot Date: Aug 25, 2025 - 1:34pm Plotted by: ekgilgen

SYMBOLS LEGEND

SYMBOL	ABBREVIATION	DESCRIPTION
	---	3 WAY MODULATING CONTROL VALVE
	---	3 WAY TWO POSITION CONTROL VALVE
	---	3 WAY VALVE
	---	ANCHOR
	---	ANGLE GLOBE VALVE
	AVN	ANGLE VALVE
	AQ	AQUASTAT
	AD	AREA DRAIN
	---	AUTOMATIC AIR VENT
	---	AUTOMATIC FLOW CONTROL
	BFP, BP, DCW	BACKFLOW PREVENTER, REDUCE PRESSURE, DOUBLE CHECKVALVE
	---	BALANCING VALVE
	---	BALL JOINT
	---	BALL VALVE
	---	BOTTOM CONNECTION
	---	BUTTERFLY VALVE
BPT	BPT	BYPASS TIMER
	CBV	CALIBRATED BALANCE VALVE
	CB, RD	CATCH BASIN, ROOF DRAIN
	---	CHECK VALVE
	---	CIRCUIT SETTER VALVE
	CP	CIRCULATING PUMP
	CO	CLEANOUT
DS	DS	DYNAMIC SENSOR
	---	ECCENTRIC REDUCER
	EJ	EXPANSION JOINT
F	FD	FIRE DAMPER
	FDC	FIRE DEPARTMENT CONNECTION
	FHC	FIRE HOSE RACK AND CABINET
	FH	FIRE HYDRANT
FS	FS	FIRE/SMOKE DAMPER
	---	FLEXIBLE CONNECTOR
	---	FLOAT & THERMOSTATIC TRAP
	FD	FLOOR DRAIN
	FS	FLOOR SINK
	---	FLOW ARROW
FE	---	FLOW ELEMENT
	FLV	FLOW LIMITING VALVE
FS	FS	FLOW SWITCH
	GCK	GAGE COCK

SYMBOLS LEGEND

SYMBOL	ABBREVIATION	DESCRIPTION
	GSCK, PC	GAS COCK, PLUG COCK
	GM	GAS METER
	GPR	GAS PRESSURE REGULATOR
	---	GATE VALVE WITH HOSE ADAPTER
	---	GATE VALVE
	---	GLOBE VALVE
	HD	HOPPER DRAIN
	HB	HOSE BIBB
	HB	HOSE BIBB
H X	H	HUMIDISTAT
	---	INVERTED BUCKET TRAP
	---	LIMIT OF DEMOLITION
	---	MANUAL AIR VENT
	---	MODULATING CONTROL VALVE
	---	PIPE BREAK
	---	PIPE CAP
	---	PIPE DOWN
	---	PIPE GUIDE
	---	PIPE UP
	---	POINT OF CONNECTION
	PIV	POST INDICATOR VALVE
	PRV	PRESSURE REGULATING VALVE
	---	PRESSURE RELIEF VALVE
	---	REDUCER
SD	SD	SMOKE DAMPER
SD	SKD	SMOKE DETECTOR
	---	SOLENOID VALVE
	---	STRAINER
S X	S	SWITCH
	---	TEST PLUG
	---	THERMOMETER
T X	T	THERMOSTAT
	TP	TRAP PRIMER
	---	TWO POSITION CONTROL VALVE
	---	UNION
	---	VALVE IN RISER/DROP
	VB	VALVE IN VALVE BOX
	---	WALL CLEANOUT
	WHA	WATER HAMMER ARRESTOR
WM	WM	WATER METER

MECHANICAL GENERAL NOTES

1. ALL WORK SHALL COMPLY WITH ALL APPLICABLE CODES, SPECIFICATIONS, LOCAL ORDINANCES, AND INDUSTRY STANDARDS.
2. VERIFY EXACT LOCATION OF ALL (E) EQUIPMENT, DUCTWORK, DIFFUSERS, REGISTERS, AND GRILLES. NOTIFY STATE IMMEDIATELY OF ANY DISCREPANCIES BETWEEN (E) SYSTEMS AND DRAWINGS.
3. COORDINATE EXACT LOCATION OF EQUIPMENT AND ALL PENETRATIONS THROUGH ROOF, FLOORS, AND WALLS WITH ARCHITECTURAL STRUCTURAL SYSTEMS PRIOR TO COMMENCING WORK.
4. COORDINATE EXACT SIZE AND ROUTING OF DUCTWORK WITH ARCHITECTURAL PLANS, STRUCTURE, AND EQUIPMENT PRIOR TO COMMENCING WORK.
5. ALL DUCTWORK, CEILING DIFFUSERS/REGISTERS/GRILLES, EQUIPMENT, PIPING, ETC. ARE NEW U.O.N. (SHOWN HEAVY). (E) DUCTWORK, PIPING, ETC. IS SHOWN LIGHT. SEE LEGEND.

THE SCOPE OF WORK INVOLVED IN THIS PROJECT IS EXEMPT FROM THE DIVISION OF THE STATE ARCHITECT ACCESSIBILITY REQUIREMENTS IN ACCORDANCE WITH TITLE 24, CALIFORNIA CODE OF REGULATIONS, 2016 CALIFORNIA BUILDING CODE.

OFFICE OF THE STATE FIRE MARSHAL
APPROVED FIRE AND PANIC ONLY
09/29/25
25-3083
Approval of this plan does not authorize or approve any omission or deviation from applicable regulations. Final approval is subject to field inspection. One set of approved plans shall be available on the project site at all times.

DGS GENERAL SERVICES
Department of General Services
Architecture & Engineering Sections
State of California
Real Estate Services Division
Project Management & Development Branch
707 Third Street, Suite 4-105
West Sacramento, California 95605

REGISTERED PROFESSIONAL ENGINEER
KEVIN D. STTLER
M 33498
EXPIRES 9/30/26
MECHANICAL
STATE OF CALIFORNIA
DATE SIGNED: 12/13/24

Issue		
No.	Date	Description

Project
STAFF RESIDENCES REHABILITATION
PORTERVILLE, CA 93257
DEVELOPMENTAL SERVICES

Supervisor	Designed	Drawn
KS	JD/JH	JD/JH

DSA App No.	SFM Permit No.
N/A	25-S-3083-C-DR

Sheet Title
HVAC LEGENDS & NOTES

Project Number
000000000006803

Sheet Scale

Sheet Number
M001

capital engineering
RANCHO CORDOVA, CALIFORNIA
JD - JH — PM - DESIGN TEAM
200502.00 — PROJECT NO.

Copyright © 2021, California Department of General Services - Real Estate Services Division

ISSUE DATE: OCTOBER 28, 2026

RELATIVE BORDER SCALE IN INCHES

8/27/2025 10:12:13 AM C:\Users\all\OneDrive - Capitalofficedocuments\200502.00_Porterville_Staff_Residences_MP22_Central_AllenKurvi

HVAC ABBREVIATIONS

SYMBOL	DESCRIPTION
ABC	ABOVE CEILING
ABV	ABOVE
ACC DR	ACCESS DOOR
ACC P	ACCESS PANEL
ACU	AIR CONDITIONING UNIT
AFF	ABOVE FINISHED FLOOR
AHU	AIR HANDLING UNIT
APD	AIR PRESSURE DROP, INCHES WATER COLUMN
APPROX	APPROXIMATE
ARCH	ARCHITECTURAL
ATTEN	ATTENUATORS
ATV	ACOUSTIC TURNING VANE
BD	BALANCE DAMPER
BDD	BACK DRAFT DAMPER
BHP	BRAKE HORSE POWER
BLDG	BUILDING
BOD	BOTTOM OF DUCT
BOR	BOTTOM OF REGISTER
BTUH	BRITISH THERMAL UNITS PER HOUR
CAP	CAPACITY
CD	CONDENSATE DRAIN
CEF	CEILING EXHAUST FAN
CFH	CUBIC FEET OF GAS PER HOUR
CFM	CUBIC FEET OF AIR FLOW PER MINUTE
CHV	CHECK VALVE
CLG	CEILING
CLR	CLEAR
CONC	CONCRETE
COND	CONDENSER
CONN	CONNECT/CONNECTION
CONT	CONTINUATION
CONTR	CONTRACTOR
D	DAMPER
DGP	DATA GATHERING PANEL
DIA	DIAMETER
DL	DOOR LOUVER
DN	DOWN
DSP	DRY STAND PIPE
DTR	DOWN THROUGH ROOF
DWG	DRAWING
EA	EXHAUST AIR
EAD	EXHAUST AIR DAMPER
EC	EVAPORATIVE COOLER
EDB	ENTERING DRY BULB
EER	ENERGY EFFICIENCY RATING
EF	EXHAUST FAN
EL	ELEVATION
ELEC	ELECTRIC/ELECTRICAL
ENT	ENTERING
EQUIP	EQUIPMENT
ESP	EXTERNAL STATIC PRESSURE
EVAP	EVAPORATOR
EW	ENTERING WATER
EWB	ENTERING WET BULB
EWC	ELECTRIC WATER COOLER
EWT	ENTERING WATER TEMPERATURE
EXH	EXHAUST
f	CUBIC FEET OF AIR FLOW PER MINUTE
F	DEGREES FAHRENHEIT
FA	FROM ABOVE
FB	FROM BELOW
FC	FLEXIBLE CONNECTION
FCV	FLOW CONTROL VALVE
FD	FIRE DAMPER
FF	FLY FAN
FIN	FINISH
FLA	FULL LOAD AMPS
FLR	FLOOR
FPM	FEET PER MINUTE
FSD	FIRE AND SMOKE DAMPER
FT (')	FOOT OR FEET
FT ^{2}	SQUARE FEET
GA	GAUGE
GALV	GALVANIZED
GI	GALVANIZED IRON
GPH	GALLONS PER HOUR
GPM	GALLONS PER MINUTE
HP	HORSE POWER
HPS	HIGH PRESSURE STEAM
HTG	HEATING
HV	HAND VALVE
HW	HOT WATER
HWR	HOT WATER RETURN
HWS	HOT WATER SUPPLY

SYMBOL	DESCRIPTION
IE	INVERT ELEVATION
IN, (")	INCH
IN ^{2}	SQUARE INCHES
KEF	KITCHEN EXHAUST FAN
KW	KILOWATTS
LAV	LAVATORY
LBS	POUNDS
LD	LOUVERED DOOR
LDB	LEAVING DRY BULB
LPS	LOW PRESSURE STEAM
LRA	LOCKED ROTOR AMPS
LTCP	LOCAL TEMPERATURE CONTROL PANEL
LVR	LOUVER
LWB	LEAVING WET BULB
MAT	MIXED AIR TEMPERATURE
MAU	MAKE-UP AIR UNIT
MAV	MANUAL AIR VENT
MAX	MAXIMUM
MBH	THOUSAND BTUs PER HOUR
MCC	MOTOR CONTROL CENTER
MD	MOTORIZED
MECH	MECHANICAL
MFR	MANUFACTURER
MIN	MINIMUM
OA	OUTSIDE AIR
OAD	OUTSIDE AIR DAMPER
OC	ON CENTER
OD	OUTSIDE DIAMETER
OH	OVERHEAD
OV	OUTLET VELOCITY
PCR	PUMPED CONDENSATE RETURN
PD	PRESSURE DROP
PRV	PRESSURE REDUCING VALVE/ PRESSURE REGULATING VALVE
PSI (G) (A)	POUNDS PER SQUARE INCH (GAUGE) (ABSOLUTE)
RA	RETURN AIR
RAD	RETURN AIR DAMPER
REF	ROOF EXHAUST FAN
RF	RETURN FAN
RPM	REVOLUTIONS PER MINUTE
RV	RELIEF VENTILATOR
S & R	SUPPLY AND RETURN
SA	SUPPLY AIR
SAD	SEE ARCHITECTURAL DRAWINGS
SB	SECURITY BARS
SD	SPLITTER DAMPER
SF	SUPPLY FAN
SG	STEAM GENERATOR
SK	SINK
SM	SHEET METAL
SOV	SHUT OFF VALVE
SP	STATIC PRESSURE
SPD	STATIC PRESSURE DROP
SQ FT	SQUARE FEET
SQ IN	SQUARE INCHES
SS	STAINLESS STEEL
STR	STRAINER
STRUC	STRUCTURAL
TA	TO ABOVE
TB	TO BELOW
T.C.C.	TEMPERATURE CONTROL CONTRACTOR
TCP	TEMPERATURE CONTROL PANEL
TCV	TEMPERATURE CONTROL VALVE
TEMP	TEMPERATURE
TFH	THERMAL FLUID HEATER
THK	THICK
TP	TOTAL PRESSURE
TSP	TOTAL STATIC PRESSURE
TYP	TYPICAL
UCD	UNDERCUT DOOR
UF	UNDERFLOOR
UG	UNDERGROUND
UON	UNLESS OTHERWISE NOTED
UTR	UP THROUGH ROOF
V (VTR)	VENT (VENT THROUGH ROOF)
VD	VOLUME DAMPER
VLV	VALVE
VSD	VARIABLE SPEED DRIVE
VV	VARIABLE AIR VOLUME CONTROLLER
VVRH	VARIABLE AIR VOLUME CONTROLLER WITH REHEAT COIL
WALL MTD (R)	WALL MOUNTED (RECESSED)
WB	WET BULB
WC	WATER CLOSET
WMS	WIRE MESH SCREEN
WP	WORKING PRESSURE
WPD	WATER PRESSURE DROP FEET OF WATER COLUMN
WT	WEIGHT

THE SCOPE OF WORK INVOLVED IN THIS PROJECT IS EXEMPT FROM THE DIVISION OF THE STATE ARCHITECT ACCESSIBILITY REQUIREMENTS IN ACCORDANCE WITH TITLE 24, CALIFORNIA CODE OF REGULATIONS, 2016 CALIFORNIA BUILDING CODE.

OFFICE OF THE STATE FIRE MARSHAL
APPROVED FIRE AND PANIC ONLY
09/29/25
25-3083
Approval of this plan does not authorize or approve any omission or deviation from applicable regulations. Final approval is subject to field inspection. One set of approved plans shall be available on the project site at all times.

GENERAL SERVICES
Department of General Services
Architecture & Engineering Sections
State of California
Real Estate Services Division
Project Management & Development Branch
707 Third Street, Suite 4-105
West Sacramento, California 95605

REGISTERED PROFESSIONAL ENGINEER
KEVIN D. STTLER
M 33498
EXPIRES 9/30/26
MECHANICAL
STATE OF CALIFORNIA
DATE SIGNED: 12/13/24

Issue		
No.	Date	Description

Project
STAFF RESIDENCES REHABILITATION
PORTERVILLE, CA 93257
DEVELOPMENTAL SERVICES

Supervisor	Designed	Drawn
Approver	Designer	Author

DSA App No.	SFM Permit No.
N/A	25-S-3083-C-DR

Sheet Title
HVAC LEGENDS & NOTES

Project Number
000000000006803

Sheet Scale

Sheet Number
M002

capital engineering
Rancho Cordova, California
JD - JH PM - DESIGN TEAM
200502.00 PROJECT NO.

Copyright © 2021, California Department of General Services: Real Estate Services Division

ISSUE DATE: OCTOBER 28, 2026

RELATIVE BORDER SCALE IN INCHES

8/27/2025 10:12:14 AM C:\Users\all\OneDrive - Capitaldocuments\200502.00_Porterville_Staff_Residences_MP22_Central_Asset\Ltr.rvt

FAN SCHEDULE

UNIT	LOCATION	"MFR" MODEL NO.	CFM HIGH/LOW	ESP (IN. W.G.)	DUTY	STYLE	RPM	MOTOR		VOLT/PH	OPER. WT. (LBS.)	MOUNTING DETAIL	CONTROL DIAGRAM	NOTES
								W	FLA					
CEF 1	RESTROOMS	"PANASONIC" FV-0511VK3	100/70	0.25	E	CE	892/902	10.5/8.2	0.18/0.14	115V / 1PH	10	4 M500	2 M600	1

LEGEND

DUTY: S-SUPPLY, R-RETURN, E-EXHAUST, DS-DESTRATIFICATION
STYLE: AF-AIRFOIL, CA- CABINET, VS-VENT SET, RE-ROOF EXHAUST, CE-CEILING, PR-PROPELLOR, IF-INLINE

NOTES:

1. LOW SPEED IS TO RUN CONTINUOUSLY IN CONFORMANCE WITH ASHRAE 62.2.

DIFFUSER, REGISTER & GRILLE SCHEDULE

SYMBOL	DESCRIPTION	TITUS	TUTTLE & BAILEY	ANEMOSTAT	KRUEGER
CD	ROUND CEILING DIFFUSER, SURFACE MOUNT	TMR	-	-	-
CR & CE	CEILING RETURN AND EXHAUST WITH 1/2" EGG CRATE CORE SURFACE MOUNT	MODEL 50 F BORDER TYPE 1	CRE-507	GC-5	EGC-5
S	DOUBLE DEFLECTION SUPPLY GRILLE WITH HORIZONTAL FRONT BARS, 3/4" SPACING	300 RL	T 64	S2V	880 V
R & E	RETURN OR EXHAUST GRILLE WITH 35° OR 45° HORIZONTAL BARS.	350 RL	T 77D	S3HD	S 80 H

NOTES:
1. PROVIDE WITH MANUFACTURER'S OPPOSED BLADE, OR SLIDING BLADE DAMPER ACCESSORY, FOR BALANCING.
2. FURNISH ALL PRODUCTS OF A SINGLE MANUFACTURER.

THE SCOPE OF WORK INVOLVED IN THIS PROJECT IS EXEMPT FROM THE DIVISION OF THE STATE ARCHITECT ACCESSIBILITY REQUIREMENTS IN ACCORDANCE WITH TITLE 24, CALIFORNIA CODE OF REGULATIONS, 2016 CALIFORNIA BUILDING CODE.

OFFICE OF THE STATE FIRE MARSHAL
APPROVED FIRE AND PANIC ONLY
09/29/25
25-3083
Approval of this plan does not authorize or approve any omission or deviation from applicable regulations. Final approval is subject to field inspection. One set of approved plans shall be available on the project site at all times.

GENERAL SERVICES
Department of General Services
Architecture & Engineering Sections
State of California
Real Estate Services Division
Project Management & Development Branch
707 Third Street, Suite 4-105
West Sacramento, California 95605

REGISTERED PROFESSIONAL ENGINEER
KEVIN D. STTLER
M 33498
EXPIRES 9/30/26
MECHANICAL
STATE OF CALIFORNIA

DATE SIGNED: 12/13/24

Issue		
No.	Date	Description

Project
STAFF RESIDENCES REHABILITATION

PORTERVILLE, CA 93257

DEVELOPMENTAL SERVICES

Supervisor	Designed	Drawn
Approver	Designer	Author

DSA App No.	SFM Permit No.
N/A	25-S-3083-C-DR

Sheet Title
HVAC SCHEDULES

Project Number
000000000006803

Sheet Scale

Sheet Number
M003

capital engineering
RANCHO CORDOVA, CALIFORNIA
JD - JH — PM - DESIGN TEAM
200502.00 — PROJECT NO.

Copyright © 2021, California Department of General Services: Real Estate Services Division

ISSUE DATE: OCTOBER 28, 2026

RELATIVE BORDER SCALE IN INCHES 0 1 2 3

8/27/2025 10:12:14 AM C:\Users\all\OneDrive - CapitalDocuments\200502.00_Porterville_Staff_Residences_MP22_Central_Alex\Central_Alex_M003.rvt

CALIFORNIA ENERGY COMMISSION

PRESCRIPTIVE RESIDENTIAL ALTERATIONS

CF1R-ALT-01-E

CERTIFICATE OF COMPLIANCE

Project Name:	Porterville Staff Residences	**Enforcement Agency:**	Porterville, City of
Dwelling Address:	26501 Avenue 140	**Permit Number:**	20-S-26887-C-NW
City and Zip Code	Porterville, 93257	**Permit Application Date:**	2024-12-05

A. General Information

01	**Project Name**	Porterville Staff Residences	02	**Date Prepared**	2024-12-06
03	**Project Location**	26501 Avenue 140	04	**Building Front Orientation (deg)**	315
05	**CA City**	Porterville	06	**Number of Altered Dwelling Units**	1
07	**Zip Code**	93257	08	**Fuel Type**	Natural gas
09	**Climate Zone**	13	10	**Total Conditioned Floor Area (ft^2):**	2020
11	**Building Type**	Single family	12	**Slab Area (ft^2):**	2020
13	**Project Scope**	Water heating			

B. Building Insulation Details - Framed (Section 150.2(b)1)

This section does not apply to this project.

C. Building Insulation Details - Non-Framed

This section does not apply to this project.

D. Building Insulation Details - Mass Walls

This section does not apply to this project.

NOTICE: This document has been generated by California Home Energy Efficiency Rating Services (CHEERS) using information uploaded by third parties not affiliated with or related to CHEERS. Therefore, CHEERS is not responsible for, and it shall guarantee, the accuracy or completeness of the information contained in this document.

CALIFORNIA ENERGY COMMISSION

PRESCRIPTIVE RESIDENTIAL ALTERATIONS

CF1R-ALT-01-E

E. Roof Replacement (Section 150.2(b)1H)

This section does not apply to this project.

F. Fenestration/Glazing Allowed Areas and Efficiencies (Section 150.2(b)1)

This section does not apply to this project.

G. Fenestration Proposed Areas and Efficiencies - Add (Section 150.2(b)1A)

This section does not apply to this project.

H. Fenestration Proposed Areas and Efficiencies - Replace (Section 150.2(b)1B)

This section does not apply to this project.

H1. Opaque Swinging Doors to Exterior (Section 150.1(c)5)

This section does not apply to this project.

I. Space Conditioning (SC) Systems - Heating/Cooling (Section 150.2(b).

This section does not apply to this project.

J. Water Heating Systems (Section 150.2(b)1H)

01	Is the existing water heater electric resistance?		No			
02	03	04	05	06	07	08
Water Heating System ID or Name	Water Heating System Type	System Option (from)	Water Heater Type	Volume	Fuel Type	# of Water Heaters in System
GWH1	Domestic Hot Water (DHW)	Option1GasPropane	StorageConsumer	50	Natural Gas	1

NOTICE: This document has been generated by California Home Energy Efficiency Rating Services (CHEERS) using information uploaded by third parties not affiliated with or related to CHEERS. Therefore, CHEERS is not responsible for, and it shall guarantee, the accuracy or completeness of the information contained in this document.

CALIFORNIA ENERGY COMMISSION

PRESCRIPTIVE RESIDENTIAL ALTERATIONS

CF1R-ALT-01-E

J. Water Heating Systems (Section 150.2(b)1H)

01	Is the existing water heater electric resistance?		No			
02	03	04	05	06	07	08
Water Heating System ID or Name	Water Heating System Type	System Option (from)	Water Heater Type	Volume	Fuel Type	# of Water Heaters in System

Options:
1. A natural gas or propane water heating system.
2. A single heat pump water heater, storage tank shall not be located outdoors and placed on an incompressible, rigid insulated surface with a minimum thermal resistance of R-10
3. A single Tier 3 or higher heat pump water heater (as rated by Northwest Energy Efficiency Alliance (NEEA))
4. If the existing water heater is electric resistance, a consumer electric water heater

NOTICE: This document has been generated by California Home Energy Efficiency Rating Services (CHEERS) using information uploaded by third parties not affiliated with or related to CHEERS. Therefore, CHEERS is not responsible for, and it shall guarantee, the accuracy or completeness of the information contained in this document.

CALIFORNIA ENERGY COMMISSION

PRESCRIPTIVE RESIDENTIAL ALTERATIONS

CF1R-ALT-01-E

DOCUMENTATION AUTHOR'S DECLARATION STATEMENT

I, I certify that this Certificate of Compliance documentation is accurate and complete.

Documentation Author Name: David Yasinskiy	Documentation Author Signature:
Company: Capital Engineering Consultants, Inc.	Signature Date: 2024-12-06
Address: 11020 Sun Center Dr	CEA/ HERS Certification Identification (if applicable):
City/State/Zip: Rancho Cordova CA 95670	Phone: (916) 851-3500

RESPONSIBLE PERSON'S DECLARATION STATEMENT

I certify the following under penalty of perjury, under the laws of the State of California:

1. The information provided on this Certificate of Compliance is true and correct.
2. I am eligible under Division 3 of the Business and Professions Code to accept responsibility for the building design or system design identified on this Certificate of Compliance (responsible designer).
3. The energy features and performance specifications, materials, components, and manufactured devices for the building design or system design identified on this Certificate of Compliance conform to the requirements of Title 24, Part 1 and Part 6 of the California Code of Regulations.
4. The building design features or system design features identified on this Certificate of Compliance are consistent with the information provided on other applicable compliance documents, worksheets, calculations, plans and specifications submitted to the enforcement agency for approval with this building permit application.
5. I understand that a registered copy of this Certificate of Compliance shall be made available with the building permit(s) issued for the building, and made available to the enforcement agency for all applicable inspections, and I will take the necessary steps to accomplish this requirement.
6. I understand that a registered copy of this Certificate of Compliance is required to be included with the documentation the builder provides to the building owner at occupancy, and I will take the necessary steps to accomplish these requirements.

Responsible Designer Name: Kevin Stillman	Responsible Designer Signature:
Company: Capital Engineering Consultants, Inc.	Date Signed: 2024-12-06
Address: 11020 Sun Center Dr	License: M 33498
City/State/Zip: Rancho Cordova CA 95670	Phone: (916) 851-3500

Digitally signed by California Home Energy Efficiency Rating Services (CHEERS). This digital signature is provided in order to secure the content of this registered document, and in no way implies Registration Provider responsibility for the accuracy of the information.

NOTICE: This document has been generated by California Home Energy Efficiency Rating Services (CHEERS) using information uploaded by third parties not affiliated with or related to CHEERS. Therefore, CHEERS is not responsible for, and it shall guarantee, the accuracy or completeness of the information contained in this document.

THE SCOPE OF WORK INVOLVED IN THIS PROJECT IS EXEMPT FROM THE DIVISION OF THE STATE ARCHITECT ACCESSIBILITY REQUIREMENTS IN ACCORDANCE WITH TITLE 24, CALIFORNIA CODE OF REGULATIONS, 2016 CALIFORNIA BUILDING CODE.

OFFICE OF THE STATE FIRE MARSHAL
APPROVED FIRE AND PANIC ONLY

09/29/25
25-3083

Approval of this plan does not authorize or approve any omission or deviation from applicable regulations. Final approval is subject to field inspection. One set of approved plans shall be available on the project site at all times.

GENERAL SERVICES

Department of General Services
Architecture & Engineering Sections
State of California
Real Estate Services Division
Project Management & Development Branch

707 Third Street, Suite 4-105
West Sacramento, California 95605

REGISTERED PROFESSIONAL ENGINEER
KEVIN D. STILLMAN
M 33498
EXPIRES 9/30/26
MECHANICAL
STATE OF CALIFORNIA

DATE SIGNED: 12/13/24

Issue

No.	Date	Description

Project

STAFF RESIDENCES REHABILITATION

PORTERVILLE, CA 93257

DEVELOPMENTAL SERVICES

Supervisor	Designed	Drawn
Approver	Designer	Author

DSA App No.	SFM Permit No.
N/A	25-S-3083-C-DR

Sheet Title

TITLE 24 COMPLIANCE FORMS

Project Number
000000000006803

Sheet Scale

Sheet Number
M004

capital engineering
RANCHO CORDOVA, CALIFORNIA

JD - JH — PM - DESIGN TEAM
200502.00 — PROJECT NO.

ISSUE DATE: OCTOBER 28, 2026

Copyright © 2021, California Department of General Services: Real Estate Services Division

V1

C:\Users\all\OneDrive - CapitalDocuments\200502.00_Porterville_Staff_Residences_MP22_Capital_A86XKLnX\

8/27/2025 10:12:14 AM

RELATIVE BORDER SCALE IN INCHES

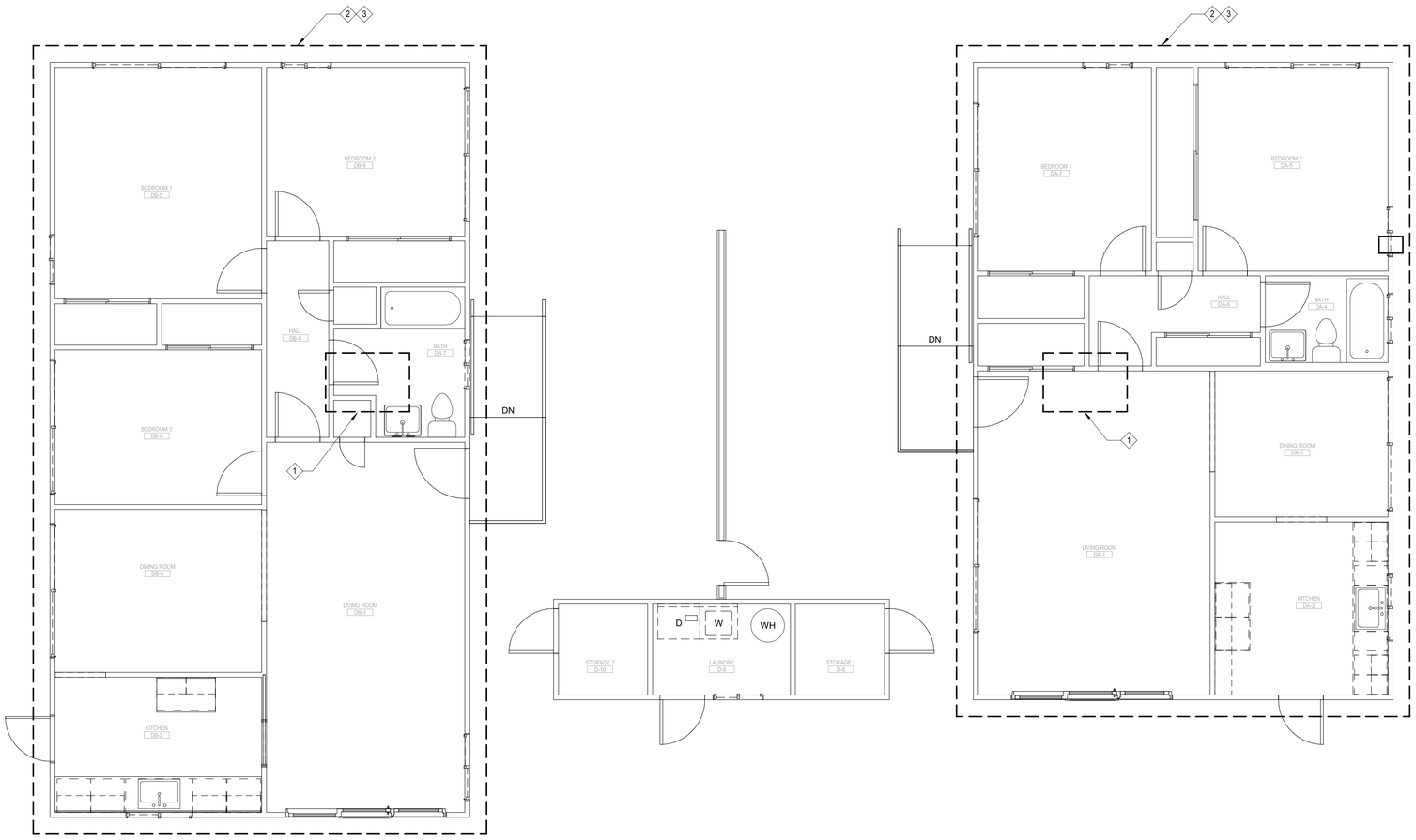

SHEET NOTES:

1. CONTRACTOR SHALL FIELD VERIFY PARTICULAR CONDITIONS AT BUILDING 100 UNIT TO CONFIRM SCOPE, AND DEMOLISH ACCORDINGLY.

KEYNOTES:

1. (E) AC UNIT ON ROOF TO REMAIN.
2. DEMOLISH ALL (E) WINDOW MOUNTED AC UNITS AND EXHAUST FANS, AND ALL ASSOCIATED PIPING AND APPURTENANCES.
3. DEMOLISH ALL (E) CEILING DIFFUSERS AND WALL GRILLES. PREPARE (E) DUCT BRANCHES FOR CONNECTION TO NEW GRILLES.

1 DUPLEX (BLDG 100) HVAC DEMO PLAN

1/4" = 1'-0"

THE SCOPE OF WORK INVOLVED IN THIS PROJECT IS EXEMPT FROM THE DIVISION OF THE STATE ARCHITECT ACCESSIBILITY REQUIREMENTS IN ACCORDANCE WITH TITLE 24, CALIFORNIA CODE OF REGULATIONS, 2016 CALIFORNIA BUILDING CODE.

OFFICE OF THE STATE FIRE MARSHAL
APPROVED FIRE AND PANIC ONLY
09/29/25
25-3083
Approval of this plan does not authorize or approve any omission or deviation from applicable regulations. Final approval is subject to field inspection. One set of approved plans shall be available on the project site at all times.

GENERAL SERVICES
Department of General Services
Architecture & Engineering Sections
State of California
Real Estate Services Division
Project Management & Development Branch
707 Third Street, Suite 4-105
West Sacramento, California 95605

REGISTERED PROFESSIONAL ENGINEER
KELVIN D. STTLER
M 33498
EXPIRES 9/30/26
MECHANICAL
STATE OF CALIFORNIA

DATE SIGNED: 12/13/24

Issue		
No.	Date	Description

Project
STAFF RESIDENCES REHABILITATION

PORTERVILLE, CA 93257

DEVELOPMENTAL SERVICES

Supervisor	Designed	Drawn
Approver	Designer	Author

DSA App No.	SFM Permit No.
N/A	25-S-3083-C-DR

Sheet Title
DUPLEX (BLDG 100) HVAC DEMO PLAN

Project Number
000000000006803

Sheet Scale

Sheet Number
MC11

capital engineering
RANCHO CORDOVA, CALIFORNIA
JD - JH — PM - DESIGN TEAM
200502.00 — PROJECT NO.

Copyright © 2021, California Department of General Services- Real Estate Services Division

ISSUE DATE: OCTOBER 28, 2026

C:\Users\all\OneDrive - Capital\Documents\Revit\200502.00_Porterville_Staff_Residences_MP22_Central_Alex.rvt
8/27/2025 10:12:15 AM
24 x 36
RELATIVE BORDER SCALE IN INCHES

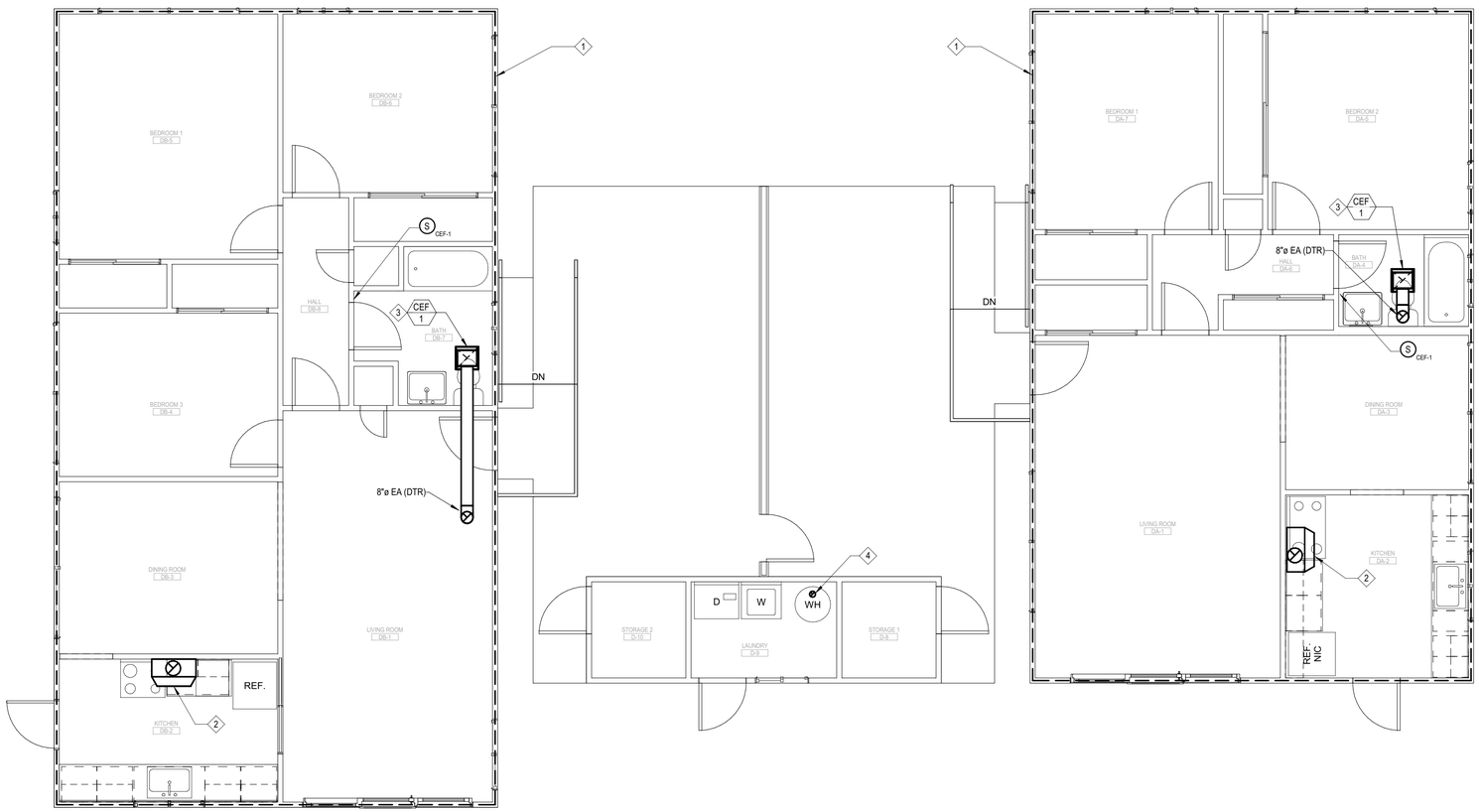

SHEET NOTES:

1. EXISTING DUCT ROUTING AND LOCATIONS ARE NOT AVAILABLE (NO EXISTING DRAWINGS). CONTRACTOR SHALL VERIFY EXACT LOCATION AND ROUTING IN FIELD AS NECESSARY FOR COMPLETION OF WORK.
2. ALL EXISTING DUCT WORK SHALL BE CLEANED PER SPECIFICATION SECTION '23 01 30 EXISTING HVAC DUCT SYSTEM CLEANING'.

KEYNOTES:

1. PROVIDE NEW SUPPLY AND RETURN GRILLES AT ALL EXISTING GRILLE LOCATIONS. SIZE TO MATCH (E) WALL/CEILING OPENING. APPROXIMATE QUANTITY: 14 SUPPLY GRILLES, 2 CENTRAL RETURN GRILLES. CONTRACTOR SHALL FIELD VERIFY EXACT QUANTITY AND LOCATIONS. SEE M003 FOR GRILLE SCHEDULE.
2. GE "JVW5301SJSS" 30" WALL-MOUNT EXHAUST HOOD, 120V, 2.5A; OR SIMILAR. ROUTE 10" EA DUCT UP THRU ROOF, DISCHARGE WITH ROOF CAP, SEE 5/M500.
3. INSTALL (N) CEILING EXHAUST FAN AND DISCHARGE THROUGH ROOF CAP, SEE 5/M500.
4. PROVIDE WATER HEATER WITH MANUFACTURER'S VENT THRU ROOF KIT.

THE SCOPE OF WORK INVOLVED IN THIS PROJECT IS EXEMPT FROM THE DIVISION OF THE STATE ARCHITECT ACCESSIBILITY REQUIREMENTS IN ACCORDANCE WITH TITLE 24, CALIFORNIA CODE OF REGULATIONS, 2016 CALIFORNIA BUILDING CODE.

OFFICE OF THE STATE FIRE MARSHAL
APPROVED FIRE AND PANIC ONLY
09/29/25
25-3083
Approval of this plan does not authorize or approve any omission or deviation from applicable regulations. Final approval is subject to field inspection. One set of approved plans shall be available on the project site at all times.

DGS GENERAL SERVICES
Department of General Services
Architecture & Engineering Sections
State of California
Real Estate Services Division
Project Management & Development Branch
707 Third Street, Suite 4-105
West Sacramento, California 95605

REGISTERED PROFESSIONAL ENGINEER
KEVIN D. STTLER
M 33498
EXPIRES 9/30/26
MECHANICAL
STATE OF CALIFORNIA
DATE SIGNED: 12/13/24

Issue

No.	Date	Description

Project
STAFF RESIDENCES REHABILITATION
PORTERVILLE, CA 93257
DEVELOPMENTAL SERVICES

Supervisor	Designed	Drawn
Approver	Designer	Author

DSA App No.	SFM Permit No.
N/A	25-S-3083-C-DR

Sheet Title
DUPLEX (BLDG 100) HVAC PLAN

Project Number
000000000006803

Sheet Scale
Sheet Number
MC21

capital engineering
RANCHO CORDOVA, CALIFORNIA
JD - JH PM - DESIGN TEAM
200502.00 PROJECT NO.

1 DUPLEX (BLDG 100) HVAC PLAN — 1/4" = 1'-0"

Copyright © 2021, California Department of General Services: Real Estate Services Division

ISSUE DATE: OCTOBER 28, 2026

8/27/2025 10:12:16 AM C:\Users\all\OneDrive - Capital\Documents\200502.00_Porterville_Staff_Residences_MP22_Central_A25RKT.rvt

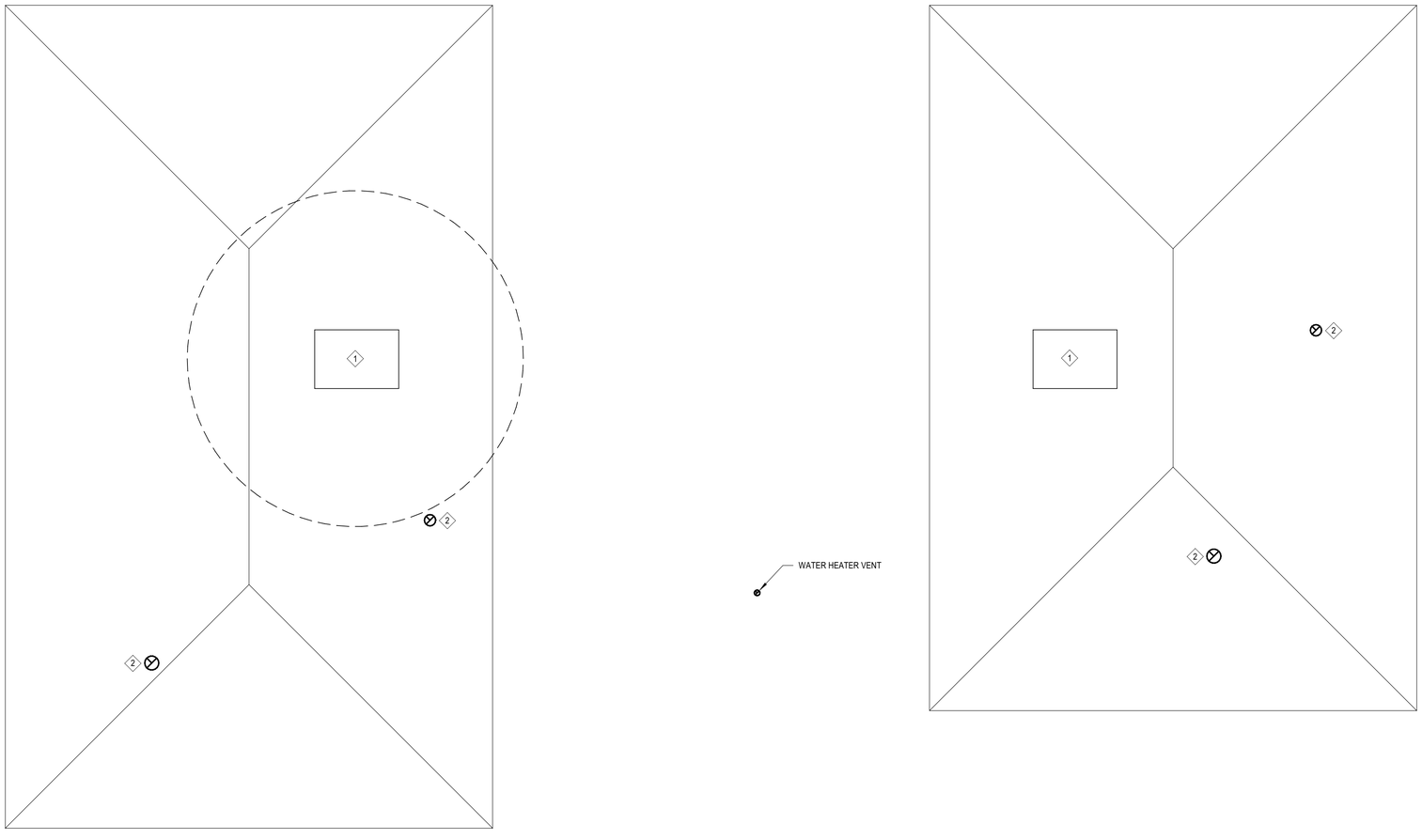

KEYNOTES:

1. (E) ROOFTOP AC UNIT TO REMAIN. LOCATION AND SIZE INDICATED ON PLAN IS APPROXIMATE.
2. TERMINATE EXHAUST DUCT WITH ROOF CAP, SEE 5/M500.

THE SCOPE OF WORK INVOLVED IN THIS PROJECT IS EXEMPT FROM THE DIVISION OF THE STATE ARCHITECT ACCESSIBILITY REQUIREMENTS IN ACCORDANCE WITH TITLE 24, CALIFORNIA CODE OF REGULATIONS, 2016 CALIFORNIA BUILDING CODE.

OFFICE OF THE STATE FIRE MARSHAL
APPROVED FIRE AND PANIC ONLY
09/29/25
25-3083
Approval of this plan does not authorize or approve any omission or deviation from applicable regulations. Final approval is subject to field inspection. One set of approved plans shall be available on the project site at all times.

DGS GENERAL SERVICES
Department of General Services
Architecture & Engineering Sections
State of California
Real Estate Services Division
Project Management & Development Branch
707 Third Street, Suite 4-105
West Sacramento, California 95605

REGISTERED PROFESSIONAL ENGINEER
KEVIN D. STTLER
M 33498
EXPIRES 9/30/26
MECHANICAL
STATE OF CALIFORNIA

DATE SIGNED: 12/13/24

Issue		
No.	Date	Description

Project
STAFF RESIDENCES REHABILITATION

PORTERVILLE, CA 93257

DEVELOPMENTAL SERVICES

Supervisor	Designed	Drawn
Approver	Designer	Author

DSA App No.	SFM Permit No.
N/A	25-S-3083-C-DR

Sheet Title
DUPLEX (BLDG 100) HVAC ROOF PLAN

Project Number
000000000006803

Sheet Scale

Sheet Number
MC22

1 DUPLEX (BLDG 100) HVAC ROOF PLAN — 1/4" = 1'-0"

capital engineering
RANCHO CORDOVA, CALIFORNIA
JD - JH — PM - DESIGN TEAM
200502.00 — PROJECT NO.

Copyright © 2021, California Department of General Services- Real Estate Services Division

ISSUE DATE: OCTOBER 28, 2026

C:\Users\all\OneDrive - Capital\Documents\200502.00_Porterville_Staff_Residences_MP22_Central_Alex\Ctr.rvt
8/27/2025 10:12:16 AM

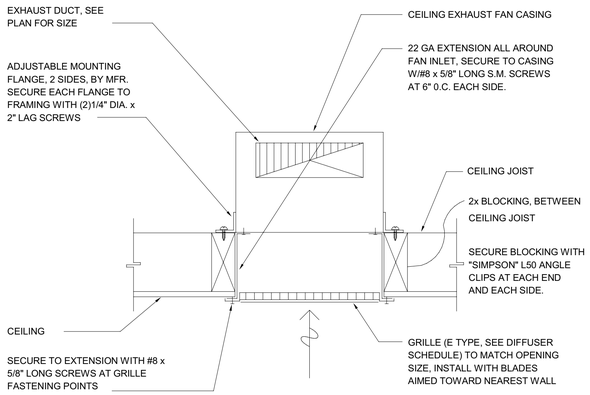

EXHAUST FAN MOUNTING - CEILING

4 / M500

SCALE : NONE

NOT USED

1 / M500

SCALE : NONE

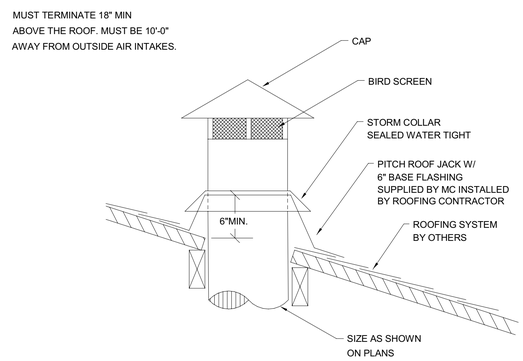

ROOF CAP

5 / M500

SCALE : NONE

NOT USED

2 / M500

SCALE : NONE

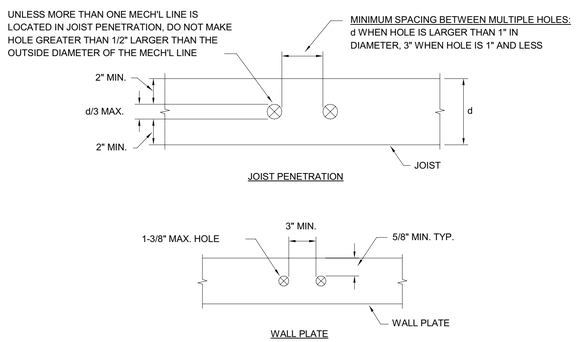

PENETRATIONS IN WOOD FRAMING

6 / M500

SCALE : NONE

NOT USED

3 / M500

SCALE : NONE

THE SCOPE OF WORK INVOLVED IN THIS PROJECT IS EXEMPT FROM THE DIVISION OF THE STATE ARCHITECT ACCESSIBILITY REQUIREMENTS IN ACCORDANCE WITH TITLE 24, CALIFORNIA CODE OF REGULATIONS, 2016 CALIFORNIA BUILDING CODE.

OFFICE OF THE STATE FIRE MARSHAL
APPROVED FIRE AND PANIC ONLY

09/29/25
25-3083

Approval of this plan does not authorize or approve any omission or deviation from applicable regulations. Final approval is subject to field inspection. One set of approved plans shall be available on the project site at all times.

GENERAL SERVICES

Department of General Services
Architecture & Engineering Sections
State of California
Real Estate Services Division
Project Management & Development Branch

707 Third Street, Suite 4-105
West Sacramento, California 95605

REGISTERED PROFESSIONAL ENGINEER — KEVIN D. STTLER — M 33498 — EXPIRES 9/30/26 — MECHANICAL — STATE OF CALIFORNIA

DATE SIGNED: 12/13/24

Issue

No.	Date	Description

Project

STAFF RESIDENCES REHABILITATION

PORTERVILLE, CA 93257

DEVELOPMENTAL SERVICES

Supervisor	Designed	Drawn
Approver	Designer	Author

DSA App No.	SFM Permit No.
N/A	25-S-3083-C-DR

Sheet Title

HVAC DETAILS

Project Number
000000000006803

Sheet Scale

Sheet Number
M500

capital engineering
Rancho Cordova, California
JD - JH — PM - DESIGN TEAM
200502.00 — PROJECT NO.

Copyright © 2021, California Department of General Services: Real Estate Services Division

ISSUE DATE: OCTOBER 28, 2026

RELATIVE BORDER SCALE IN INCHES

C:\Users\all\OneDrive - Capital\Documents\200502.00_Porterville_Staff_Residences_MP22_Central_Area\R22.rvt
8/27/2025 10:12:15 AM

NOT USED

SCALE : NONE

1
M600

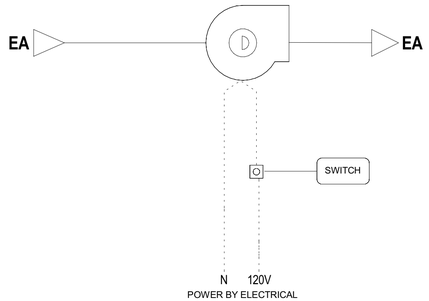

FAN SHALL BE COMMANDED ON AND OFF WITH WALL SWITCH.
MECHANICAL EXHAUST SYSTEM SHALL BE INSTALLED TO OPERATE CONTINUOUSLY AND LEFT ON.

EF CONTROL - SWITCH

SCALE : NONE

2
M600

capital engineering
RANCHO CORDOVA, CALIFORNIA
JD - JH — PM - DESIGN TEAM
200502.00 — PROJECT NO.

THE SCOPE OF WORK INVOLVED IN THIS PROJECT IS EXEMPT FROM THE DIVISION OF THE STATE ARCHITECT ACCESSIBILITY REQUIREMENTS IN ACCORDANCE WITH TITLE 24, CALIFORNIA CODE OF REGULATIONS, 2016 CALIFORNIA BUILDING CODE.

OFFICE OF THE STATE FIRE MARSHAL
APPROVED FIRE AND PANIC ONLY
09/29/25
25-3083
Approval of this plan does not authorize or approve any omission or deviation from applicable regulations. Final approval is subject to field inspection. One set of approved plans shall be available on the project site at all times.

DGS GENERAL SERVICES

Department of General Services
Architecture & Engineering Sections
State of California
Real Estate Services Division
Project Management & Development Branch
707 Third Street, Suite 4-105
West Sacramento, California 95605

REGISTERED PROFESSIONAL ENGINEER
KEVIN D. STTLER
M 33498
EXPIRES 9/30/26
MECHANICAL
STATE OF CALIFORNIA

DATE SIGNED: 12/13/24

Issue

No.	Date	Description

Project
STAFF RESIDENCES REHABILITATION
PORTERVILLE, CA 93257
DEVELOPMENTAL SERVICES

Supervisor	Designed	Drawn
Approver	Designer	Author

DSA App No.	SFM Permit No.
N/A	25-S-3083-C-DR

Sheet Title
HVAC CONTROLS

Project Number
000000000006803

Sheet Scale

Sheet Number
M600

ISSUE DATE: OCTOBER 28, 2026

Copyright © 2021, California Department of General Services- Real Estate Services Division

8/27/2025 10:12:15 AM C:\Users\all\OneDrive - Capital\Documents\200502.00_Porterville_Staff_Residences_MP22_Central_AlexKu.rvt

RELATIVE BORDER SCALE IN INCHES 0 1 2 3

SYMBOLS LEGEND

SYMBOL	ABBREVIATION	DESCRIPTION
	---	3 WAY MODULATING CONTROL VALVE
	---	3 WAY TWO POSITION CONTROL VALVE
	---	3 WAY VALVE
	---	ANCHOR
	---	ANGLE GLOBE VALVE
	AVN	ANGLE VALVE
	AQ	AQUASTAT
	AD	AREA DRAIN
	---	AUTOMATIC AIR VENT
	---	AUTOMATIC FLOW CONTROL
	BFP, BP, DCW	BACKFLOW PREVENTER, REDUCE PRESSURE, DOUBLE CHECKVALVE
	---	BALANCING VALVE
	---	BALL JOINT
	---	BALL VALVE
	---	BOTTOM CONNECTION
	---	BUTTERFLY VALVE
BPT	BPT	BYPASS TIMER
	CBV	CALIBRATED BALANCE VALVE
	CB, RD	CATCH BASIN, ROOF DRAIN
	---	CHECK VALVE
	---	CIRCUIT SETTER VALVE
	CP	CIRCULATING PUMP
	CO	CLEANOUT
DS	DS	DYNAMIC SENSOR
	---	ECCENTRIC REDUCER
	EJ	EXPANSION JOINT
F	FD	FIRE DAMPER
	FDC	FIRE DEPARTMENT CONNECTION
	FHC	FIRE HOSE RACK AND CABINET
	FH	FIRE HYDRANT
FS	FS	FIRE/SMOKE DAMPER
	---	FLEXIBLE CONNECTOR
	---	FLOAT & THERMOSTATIC TRAP
	FD	FLOOR DRAIN
	FS	FLOOR SINK
	---	FLOW ARROW
FE	---	FLOW ELEMENT
	FLV	FLOW LIMITING VALVE
FS	FS	FLOW SWITCH
	GCK	GAGE COCK

SYMBOLS LEGEND

SYMBOL	ABBREVIATION	DESCRIPTION
	GSCK, PC	GAS COCK, PLUG COCK
	GM	GAS METER
	GPR	GAS PRESSURE REGULATOR
	---	GATE VALVE WITH HOSE ADAPTER
	---	GATE VALVE
	---	GLOBE VALVE
	HD	HOPPER DRAIN
	HB	HOSE BIBB
	HB	HOSE BIBB
H X	H	HUMIDISTAT
	---	INVERTED BUCKET TRAP
	---	LIMIT OF DEMOLITION
	---	MANUAL AIR VENT
	---	MODULATING CONTROL VALVE
	---	PIPE BREAK
	---	PIPE CAP
	---	PIPE DOWN
	---	PIPE GUIDE
	---	PIPE UP
	---	POINT OF CONNECTION
	PIV	POST INDICATOR VALVE
	PRV	PRESSURE REGULATING VALVE
	---	PRESSURE RELIEF VALVE
	---	REDUCER
SD	SD	SMOKE DAMPER
SD	SKD	SMOKE DETECTOR
	---	SOLENOID VALVE
	---	STRAINER
TS X	TS	TEMPERATURE SENSOR
	---	TEST PLUG
	---	THERMOMETER
T X	T	THERMOSTAT
	TP	TRAP PRIMER
	---	TWO POSITION CONTROL VALVE
	---	UNION
	---	VALVE IN RISER/DROP
	VB	VALVE IN VALVE BOX
	---	WALL CLEANOUT
	WHA	WATER HAMMER ARRESTOR
WM	WM	WATER METER

PLUMBING GENERAL NOTES

1. OFFSET VENT THROUGH ROOFS 10'-0" MINIMUM FROM AIR INTAKES AND 4'-0" FROM OUTSIDE WALLS.
2. HVAC EQUIPMENT IS SHOWN FOR THE COORDINATION OF UTILITIES ONLY. REFER TO 'M' SHEETS FOR MORE INFORMATION.
3. THE CONNECTION OF NATURAL GAS LINES TO EQUIPMENT SHALL INCLUDE A LINE SIZE SHUT-OFF VALVE, UNION, AND A MINIMM 6" LONG DIRT LEG WITH ACCESSIBLE END CAP.
4. THE CONNECTION OF CONDENSATE DRAIN LINES TO HVAC EQUIPMENT SHALL INCLUDE A MINIMUM 4" DEEP "P"-TRAP AND PLUGGED TEE AT ALL OFFSETS.
5. PROVIDE WATER HAMMER ARRESTORS (WHA) AS INDICATED ON PLUMBING PLANS AND/OR AS DESCRIBED WITHIN DIVISION 22 SPECIFICATIONS. SIZING SHALL BE IN ACCORDANCE WITH PDI STANDARD WH-201.
6. FOR PIPES PASSING THROUGH, UNDER, OR PARALLEL TO BUILDING FOOTINGS, RETAINING WALLS ETC. REFER TO STRUCTURAL DETAILS, 'S' SHEETS, FOR TYPICAL ARRANGEMENT.
7. CONTRACTOR SHALL FIELD VERIFY ALL POINTS OF CONNECTION TO SITE PIPING (LOCATIONS AND INVERT) PRIOR TO EXCAVATION, FABRICATION AND INSTALLATION OF ASSOCIATED PIPING RUNS. NOTIFY STATE IMMEDIATELY IF POINTS OF CONNECTION OR INVERTS ARE DIFFERENT THAN REPRESENTED ON THE DRAWINGS.
8. OFFSET ALL RISERS AND DROPS TO AVOID PENETRATIONS AT TOP PLATES.
9. SEAL ALL PIPE PENETRATIONS THRU FLOORS WATERTIGHT.
10. DRAWINGS SHALL BE CONSIDERED DIAGRAMMATIC ONLY. CONTRACTOR SHALL FIELD VERIFY WHERE POSSIBLE, EXACT LOCATIONS, SIZES, AND ELEVATIONS OF ALL ITEMS SHOWN PRIOR TO THE INSTALLATION OF ANY NEW WORK.
11. THE DRAWINGS ARE NOT INTENDED TO SHOW EVERY OFFSET OR FITTING OR EVERY STRUCTURAL DIFFICULTY THAT MAY BE ENCOUNTERED DURING INSTALLATION OF THE WORK. LOCATION OF ALL ITEMS NOT DEFINITELY FIXED BY DIMENSIONS ARE APPROXIMATE ONLY. EXACT LOCATIONS NECESSARY TO SECURE BEST CONDITIONS AND RESULTS MUST BE DETERMINED AT THE JOB SITE AND SHALL HAVE THE APPROVAL OF THE STATE BEFORE BEING INSTALLED.
12. ALL VALVES SHOWN SHALL BE FULL LINE SIZE UNLESS OTHERWISE NOTED.
13. CLOSELY COORDINATE ALL WORK WITH OTHER TRADES PRIOR TO TRENCHING OR INSTALLATION OF NEW. IDENTIFY SIZE AND LOCATIONS OF ALL PENETRATIONS THROUGH FOUNDATIONS, WALLS OR ROOFS PRIOR TO FABRICATION OF ANY SYSTEMS OR ORDERING MATERIALS AFFECTED BY POSSIBLE COORDINATION CONFLICTS.
14. CONCRETE ANCHORS SHALL BE HILTI, KWIK BOLT TZ-2 3/8" WITH EMBEDMENT AS PER STRUCTURAL PLANS. ANCHORS SHALL BE TESTED PER IR 19-1, INTERPRETIVE REGULATION FOR EXPANSION ANCHORS IN HARDENED CONCRETE. ANCHOR TEST SHALL BE 968 LBS. TENSION.
15. PIPING SHALL BE SUPPORTED AND BRACED IN STRICT COMPLIANCE WITH DIVISION 22 SPECIFICATIONS.
16. ALL NEW SANITARY WASTE PIPING SHOWN SHALL BE SLOPED AT 1/4" PER FOOT MINIMUM UNLESS OTHERWISE NOTED ON PLANS. WHERE SLOPES LESS THAN 1/4" PER FOOT ARE INDICATED, CONTRACTOR SHALL SLOPE NEW PIPING UNIFORMLY BETWEEN UPPER TERMINAL OF PIPE AND THE POINT OF CONNECTION TO THE SITE PIPING (AS INDICATED ON THE CIVIL PLANS) TO ACHIEVE MAXIMUM SLOPE POSSIBLE AND IN NO CASE SHALL THE PIPING BE SLOPED LESS THAN THE MINIMUM INDICATED.
17. CONCEAL ALL PIPING IN WALL FURRING, PARTITIONS, ETC.
18. REFER TO ARCHITECTURAL DRAWINGS FOR BUILDING DIMENSIONS AND EXACT LOCATIONS OF PLUMBING FIXTURES.

THE SCOPE OF WORK INVOLVED IN THIS PROJECT IS EXEMPT FROM THE DIVISION OF THE STATE ARCHITECT ACCESSIBILITY REQUIREMENTS IN ACCORDANCE WITH TITLE 24, CALIFORNIA CODE OF REGULATIONS, 2016 CALIFORNIA BUILDING CODE.

OFFICE OF THE STATE FIRE MARSHAL
APPROVED FIRE AND PANIC ONLY
09/29/25
25-3083
Approval of this plan does not authorize or approve any omission or deviation from applicable regulations. Final approval is subject to field inspection. One set of approved plans shall be available on the project site at all times.

GENERAL SERVICES
Department of General Services
Architecture & Engineering Sections
State of California
Real Estate Services Division
Project Management & Development Branch
707 Third Street, Suite 4-105
West Sacramento, California 95605

REGISTERED PROFESSIONAL ENGINEER
KEVIN D. STTLER
M 33498
EXPIRES 9/30/26
MECHANICAL
STATE OF CALIFORNIA

DATE SIGNED: 12/13/24

Issue

No.	Date	Description

Project
STAFF RESIDENCES REHABILITATION

PORTERVILLE, CA 93257

DEVELOPMENTAL SERVICES

Supervisor	Designed	Drawn
Approver	Designer	Author

DSA App No.	SFM Permit No.
N/A	25-S-3083-C-DR

Sheet Title
PLUMBING LEGENDS & NOTES

Project Number
000000000006803

Sheet Scale

Sheet Number
P001

capital engineering
RANCHO CORDOVA, CALIFORNIA
JD - JH PM - DESIGN TEAM
200502.00 PROJECT NO.

Copyright © 2021, California Department of General Services- Real Estate Services Division

ISSUE DATE: OCTOBER 28, 2026

RELATIVE BORDER SCALE IN INCHES

C:\Users\all\OneDrive - Capital\Documents\200502.00_Porterville_Staff_Residences_MP22_Central_Alex.rvt
8/27/2025 10:12:16 AM

PLUMBING ABBREVIATIONS

ABBREVIATION	DESCRIPTION
ABC	ABOVE CEILING
ACC DR	ACCESS DOOR
ACC P	ACCESS PANEL
AFF	ABOVE FINISHED FLOOR
AFG	ABOVE FINISHED GRADE
AFP	ABOVE FINISHED PAVEMENT
AHV	AIR HOSE VALVE
ASH	AUTOMATIC SPRINKLER HEAD
BEL	BELOW
BFF	BELOW FINISHED FLOOR
BFG	BELOW FINISHED GRADE
BFP	BACKFLOW PREVENTER
BLDG	BUILDING
CDC	CALIFORNIA DEPARTMENT OF CORRECTIONS
CFF	CAPPED FOR FUTURE
CLG	CEILING
CMP	CORRUGATED METAL PIPE
COL	COLUMN
CONN	CONNECT/CONNECTION
CONT	CONTINUATION
CWH	COLD WATER HEADER
(D)	DROP
DF	DRINKING FOUNTAIN
DIA	DIAMETER
DN	DOWN
DW	DRY WELL
DW	DISHWASHER
DWG	DRAWING
(E)	EXISTING
EL	ELEVATION
ELEC	ELECTRICAL
EQUIP	EQUIPMENT
ES	EMERGENCY SHOWER
EW	EYE WASH
EWC	ELECTRIC WATER COOLER
FA	FROM ABOVE
FB	FROM BELOW
FD	FLOOR DRAIN
FFE	FINISHED FLOOR ELEVATION
FF	FINISHED FLOOR
FLR	FLOOR
FSR	FIRE SPRINKLER RISER
FT	FLOOR TOILET
/FT	PER FOOT
FTK	FLUSH TANK
FU	FIXTURE UNIT
FV	FLUSH VALVE
GAL	GALLONS
HC	HANDICAPPED
HR	HOUR
HS	HAND SINK
HT	HEIGHT
HTR	HEATER
HWH	HOT WATER HEATER
IE	INVERT ELEVATION
KEC	KITCHEN EQUIPMENT CONTRACTOR
KS	KITCHEN SINK
LV	LAVATORY
MC	MOTOR CONTROLLER
MECH	MECHANICAL
MTD	MOUNTED

ABBREVIATION	DESCRIPTION
(N)	NEW
NC	NORMALLY CLOSED
NO	NORMALLY OPEN
NTS	NOT TO SCALE
OFCI	OWNER FURNISHED, CONTRACTOR INSTALLED
OFOI	OWNER FURNISHED, OWNER INSTALLED
OH	OVERHEAD
OS & Y	OUTSIDE SCREW AND YOKE
PH	PHASE
PLBG	PLUMBING
PLD	PLANTER DRAIN
PO	PLUGGED OUTLET
PRS	PRE-RINSE SINK
PS	POT SINK
PT	PLASTER TRAP
(R)	RISER
REC	RECESSED
REQD	REQUIRED
REV	REVISION
RM	ROOM
RPBP	REDUCED PRESSURE BACKFLOW PREVENTER
RWL	RAIN WATER LEADER
SD	STORM DRAIN
SH	SHOWER
SPEC	SPECIFICATION
SS	STAINLESS STEEL/SERVICE SINK
STD	STANDARD
STRUC	STRUCTURAL
(TA)	TO ABOVE
(TB)	TO BELOW
T.C.C.	TEMPERATURE CONTROLS CONTRACTOR
TD	TRENCH DRAIN
TEMP	TEMPERATURE
TOC	TOP OF CONCRETE
TS	TAMPER SWITCH
TYP	TYPICAL
UF	UNDER FLOOR
UG	UNDERGROUND
UL	UNDERWRITERS' LABORATORIES
UR	URINAL
US	UNDER SLAB
V	VENT
VTR	VENT THRU ROOF
VO	VALVED OUTLET
VW	VACUUM WASTE
W/	WITH
W/O	WITHOUT
W	WASTE
WC	WATER CLOSET
WC/L	WATER CLOSET AND LAVATORY
WF	WASH FOUNTAIN
ZCV	ZONE CONTROL VALVE

THE SCOPE OF WORK INVOLVED IN THIS PROJECT IS EXEMPT FROM THE DIVISION OF THE STATE ARCHITECT ACCESSIBILITY REQUIREMENTS IN ACCORDANCE WITH TITLE 24, CALIFORNIA CODE OF REGULATIONS, 2016 CALIFORNIA BUILDING CODE.

OFFICE OF THE STATE FIRE MARSHAL
APPROVED FIRE AND PANIC ONLY

09/29/25
25-3083

Approval of this plan does not authorize or approve any omission or deviation from applicable regulations. Final approval is subject to field inspection. One set of approved plans shall be available on the project site at all times.

GENERAL SERVICES

Department of General Services
Architecture & Engineering Sections
State of California
Real Estate Services Division
Project Management & Development Branch

707 Third Street, Suite 4-105
West Sacramento, California 95605

REGISTERED PROFESSIONAL ENGINEER
KEVIN D. STTLER
M 33498
EXPIRES 9/30/26
MECHANICAL
STATE OF CALIFORNIA

DATE SIGNED: 12/13/24

Issue		
No.	Date	Description

Project
STAFF RESIDENCES REHABILITATION

PORTERVILLE, CA 93257

DEVELOPMENTAL SERVICES

Supervisor	Designed	Drawn
Approver	Designer	Author

DSA App No.	SFM Permit No.
N/A	25-S-3083-C-DR

Sheet Title
PLUMBING LEGENDS & NOTES

Project Number
000000000006803

Sheet Scale

Sheet Number
P002

capital engineering
RANCHO CORDOVA, CALIFORNIA
JD - JH PM - DESIGN TEAM
200502.00 PROJECT NO.

Copyright © 2021, California Department of General Services: Real Estate Services Division

V1

RELATIVE BORDER SCALE IN INCHES 0 1 2 3

ISSUE DATE: OCTOBER 28, 2026

8/27/2025 10:12:17 AM C:\Users\all\OneDrive - CapitalDocuments\200502.00_Porterville_Staff_Residences_MP22_Central_Alla\Kct.rvt

PLUMBING FIXTURE SCHEDULE

ADA	SYMBOL	FIXTURE	FIXTURE MANUFACTUER AND MODEL NO.	FAUCET OR VALVE MANUFACTURER AND MODEL NO.	TRIM AND SUPPORT MANUFACTURER AND MODEL NO.	REMARKS	VENT	WASTE		COLD WATER		HOT WATER	
								BRANCH	OUTLET	BRANCH	OUTLET	BRANCH	OUTLET
YES	**WC-1**	WATER CLOSET FLOOR MOUNTED FLUSH TANK	"KOHLER" HIGHLINE NO. K-3519 FLOOR MOUNTED, ELONGATED, 1.0 GPF, PRESSURE ASSISTED SIPHON JET TANK TYPE. 17-1/8" RIM HEIGHT.	INTEGRAL	SEAT: "CHURCH" MODEL 295SSCT OR "BEMIS" MODEL 1955SSCT. PROVIDE WITH SELF-SUSTAINING CONCEALED CHECK HINGES, ONE PIECE STAINLESS STEEL POSTS. WHITE COLER. SUPPLY STOP: "BRASS CRAFT" MODEL SR-3712-DL.	WHERE USED FOR CBC ACCESSIBLE WATER CLOSETS, THE FLUSH TRIP LEVER SHALL BE MOUNTED ON THE WIDE SIDE OF THE WATER CLOSET ENCLOSURE.	2"	4"	4"	1"	3/4"	-	-
YES	**SH-1**	SHOWER FLUSH MOUNTED	"SYMMONS" ORIGINS 9603-PLR-1.5 HAND SHOWER SYSTEM. WALL/HAND SHOWER W/ 5' FLEXIBLE METAL HOSE, IN LINE VACUUM BREAKER AND WALL CONNECTION. 36" SLIDE BAR FOR MOUNTING HAND SHOWER, 1.5 GPM FLOW RATE RESTRICTOR, POLISHED CHROME FINISH.	SYMMONS TEMPTROL PRESSURE BALANCING MIXING VALVE WITH ADJUSTABLE STOP SCREW TO LIMIT HANDLE TURN. SEPARATE DUAL OUTLET DIVERTER VALVE.	PROVIDE WITH 1.5 GPM FLOW RATE RESTRICTOR. SHOWER DRAIN SHALL BE "J.R. SMITH" MODEL 2010-CPHU-TT-BB.	MOUNT AT HEIGHT INDICATED ON ARCHTECTURAL DRAWINGS.	1-1/2"	2"	2"	3/4"	1/2"	3/4"	1/2"
YES	**S-1**	KITCHEN SINK COUNTER MOUNTED ONE COMPARTMENT	"ELKAY" MODEL DLR312212, 22" FRONT TO BACK, 31" WIDE x 12" DEPTH OVERALL. 18 GAUGE STAINLESS STEEL, LEDGE BACK WITH SELF-RIM. PROVIDE SINGLE FAUCET HOLE. PROVIDE REAR DRAIN LOCATION. PROVIDE FACTORY ADHERED VANDAL RESISTANT BACKING PLATE AT FAUCET, AND SLOT AT FAUCET FOR VANDAL RESISTANT PINS.	"CHICAGO" ECAST MODEL 1888-E35-369ABCP, WITH 2-3/8" LEVER HANDLES, 9-1/2" SWING TUBE SPOUT AND 1.5 GPM PRESSURE COMPENSATING SOFTFLO AERATOR.	"ELKAY" MODEL LKAD35, OFFSET CRUMB CUP STRAINER WITH REMOVABLE BASKET AND P-TRAP. INSTALL P-TRAP FLUSH TO WALL.	COUNTER MOUNTED.	1-1/2"	2"	1-1/2"	3/4"	1/2"	3/4"	1/2"
YES	**S-2**	KITCHEN SINK COUNTER MOUNTED TWO COMPARTMENTS	"ELKAY" MODEL DLR432212, 22" FRONT TO BACK, 43" WIDE x 12" DEPTH OVERALL. 18 GAUGE STAINLESS STEEL, TWO COMPARTMENT WITH LEDGE BACK WITH SELF-RIM. PROVIDE FAUCET HOLDS ON 8" CENTERS. PROVIDE REAR DRAIN LOCATION FOR BOTH COMPARTMENTS.	"CHICAGO" ECAST MODEL 1888-E35-369ABCP, WITH 2-3/8" LEVER HANDLES, 9-1/2" SWING TUBE SPOUT AND 1.5 GPM PRESSURE COMPENSATING SOFTFLO AERATOR.	"ELKAY" MODEL LKAD35, OFFSET CRUMB CUP STRAINER WITH REMOVABLE BASKET AND P-TRAP FOR EACH COMPARTMENT. INSTALL P-TRAP FLUSH TO WALL.	COUNTER MOUNTED.	1-1/2"	2"	1-1/2"	3/4"	1/2"	3/4"	1/2"
	WB	WASHING MACHINE WALL BOX	"GUY GRAY" MODEL MWB-13 WASHING MACHINE WALL BOX, WITH 1/2" SWEAT CONN. INLET AND 2" OUTLET	INTEGRAL	INTEGRAL	PROVIDE STAINLESS STEEL BOX AND STAINLESS STEEL FACE PLATE.	-	-	-	3/4"	1/2"	3/4"	1/2"
	RIM	REFRIGERATOR ICE MAKER	"GUY GRAY" MODEL SSIB2AB LEAD FREE ICE MAKER HOOK-UP, WITH 1/2" FIP INLET AND 1/4"COMPRESSION OUTLET.	INTEGRAL	INTEGRAL	PROVIDE STAINLESS STEEL BOX AND STAINLESS STEEL FACE PLATE.	-	-	-	1/2"	1/4"	-	-
	HB	HOSE BIBB	"J.R. SMITH" MODEL 5509. EXTERIOR WALL MOUNT NON-FREEZE.		WITH INTEGRAL VACUUM BREAKER		-	-	-	3/4"	3/4"	-	-

MISC. PLUMBING SCHEDULE

TAG	DESCRIPTION
GD 1	GARBAGE DISPOSER "IN-SINK-ERATOR" EVOLUTION ESSENTIAL, CONTINUOUS FEED, 3/4HP, CAPACITOR START. WHERE INSTALLED IN 2 COMPARTMENT SINK, INSTALL DISPOSER IN RIGHT HAND COMPARTMENT. PROVIDE WALL SWITCH FOR OPERATION OF DISPOSER AND PROVIDE FULL 6 YEAR PARTS AND SERVICE WARRANTY FOR DISPOSER.
GWH 1	GAS WATER HEATER "AO SMITH" PROLINE GDNT-50L, 50 GAL STORAGE CAPACITY, 38 MBH INPUT, 41 GPH @ 90 DEGREES RISE, ULTRA-LOW NOx, 120V/60HZ/1PH. OPERATING WEIGHT: 600 LBS PROVIDE WITH "SIOUX CHIEF" 598-010 WATER HEATER STAND. 21"x21"x18"H, 18 GAUGE METAL, RATED TO HOLD 650 LBS. MOUNTING DETAIL: 1/P500
ET 1	EXPANSION TANK "AO SMITH" PMI-2 EXPANSION TANK. FIELD ADJUSTABLE 38 PSI AIR CHARGE. 2 GALLON.

THE SCOPE OF WORK INVOLVED IN THIS PROJECT IS EXEMPT FROM THE DIVISION OF THE STATE ARCHITECT ACCESSIBILITY REQUIREMENTS IN ACCORDANCE WITH TITLE 24, CALIFORNIA CODE OF REGULATIONS, 2016 CALIFORNIA BUILDING CODE.

OFFICE OF THE STATE FIRE MARSHAL
APPROVED FIRE AND PANIC ONLY
09/29/25
25-3083
Approval of this plan does not authorize or approve any omission or deviation from applicable regulations. Final approval is subject to field inspection. One set of approved plans shall be available on the project site at all times.

DGS GENERAL SERVICES
Department of General Services
Architecture & Engineering Sections
State of California
Real Estate Services Division
Project Management & Development Branch
707 Third Street, Suite 4-105
West Sacramento, California 95605

REGISTERED PROFESSIONAL ENGINEER
KEVIN D. STTLER
M 33498
EXPIRES 9/30/26
MECHANICAL
STATE OF CALIFORNIA

DATE SIGNED: 12/13/24

Issue		
No.	Date	Description

Project
STAFF RESIDENCES REHABILITATION
PORTERVILLE, CA 93257
DEVELOPMENTAL SERVICES

Supervisor	Designed	Drawn
Approver	Designer	Author

DSA App No.	SFM Permit No.
N/A	25-S-3083-C-DR

Sheet Title
PLUMBING SCHEDULES

Project Number
000000000006803

Sheet Scale

Sheet Number
P003

capital engineering
RANCHO CORDOVA, CALIFORNIA
JD - JH PM - DESIGN TEAM
200502.00 PROJECT NO.

Copyright © 2021, California Department of General Services, Real Estate Services Division

ISSUE DATE: OCTOBER 28, 2026

RELATIVE BORDER SCALE IN INCHES

8/27/2025 10:12:17 AM C:\Users\all\OneDrive - CapitalDocuments\200502.00_Porterville_Staff_Residences_MP22_Central_Alex\Rt.rvt

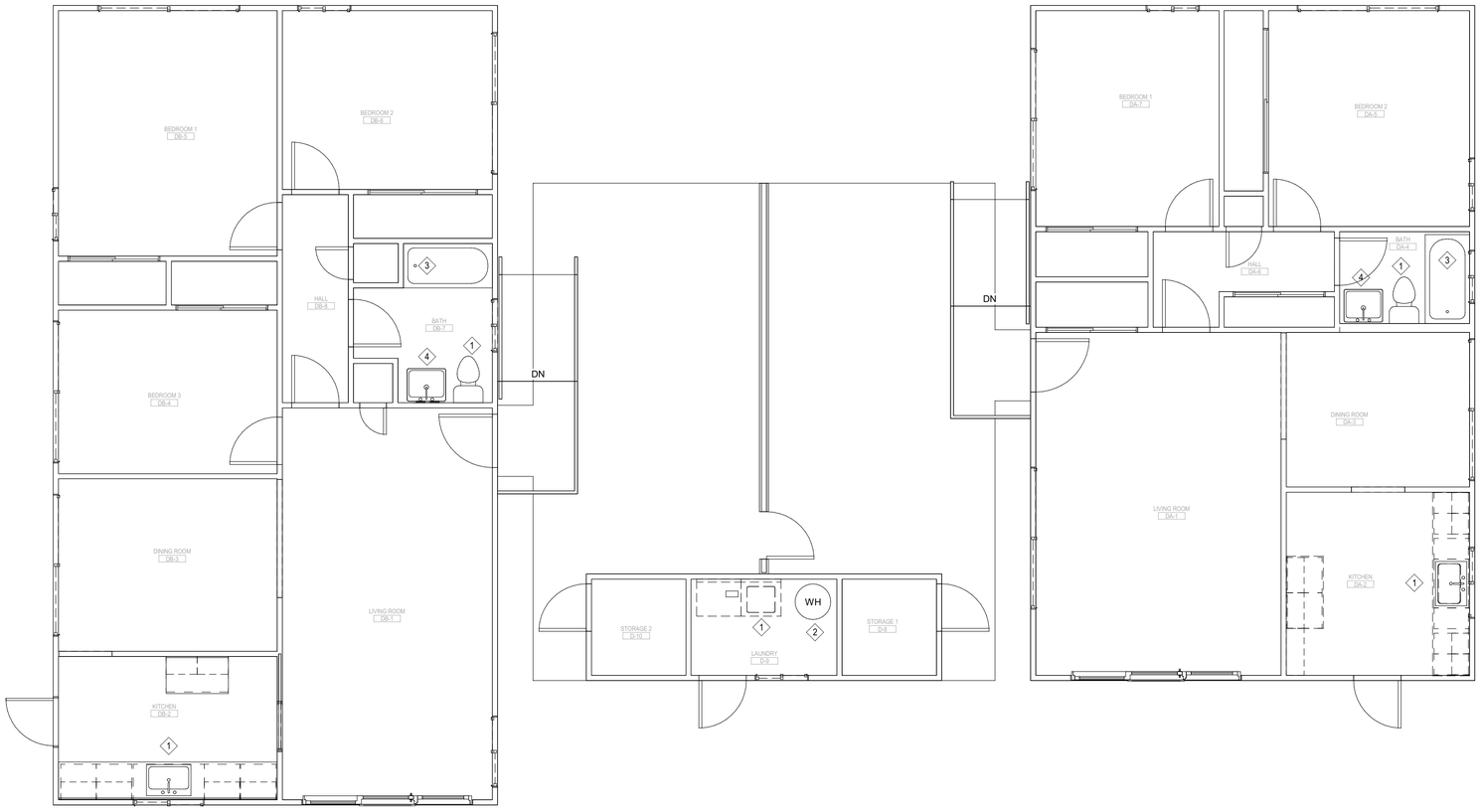

KEYNOTES:

1. DEMOLISH (E) PLUMBING FIXTURE. CAP ALL PIPE CONNECTIONS AND PREPARE FOR CONNECTION TO NEW FIXTURE.
2. DEMOLISH (E) WATER HEATER. CAP ALL PIPE CONNECTIONS AND PREPARE FOR CONNECTION TO NEW WATER HEATER.
3. (E) SHOWER TUB TO BE REMOVED AND REINSTALLED, SEE ARCH FOR MORE INFORMATION.
4. (E) BATHROOM SINK TO BE REMOVED AND REINSTALLED, SEE ARCH FOR MORE INFORMATION.

THE SCOPE OF WORK INVOLVED IN THIS PROJECT IS EXEMPT FROM THE DIVISION OF THE STATE ARCHITECT ACCESSIBILITY REQUIREMENTS IN ACCORDANCE WITH TITLE 24, CALIFORNIA CODE OF REGULATIONS, 2016 CALIFORNIA BUILDING CODE.

OFFICE OF THE STATE FIRE MARSHAL
APPROVED FIRE AND PANIC ONLY

09/29/25
25-3083

Approval of this plan does not authorize or approve any omission or deviation from applicable regulations. Final approval is subject to field inspection. One set of approved plans shall be available on the project site at all times.

DGS GENERAL SERVICES

Department of General Services
Architecture & Engineering Sections
State of California
Real Estate Services Division
Project Management & Development Branch

707 Third Street, Suite 4-105
West Sacramento, California 95605

KEVIN D. STTLER — REGISTERED PROFESSIONAL ENGINEER — M 33498 — EXPIRES 9/30/26 — MECHANICAL — STATE OF CALIFORNIA

DATE SIGNED: 12/13/24

Issue		
No.	Date	Description

Project
STAFF RESIDENCES REHABILITATION

PORTERVILLE, CA 93257

DEVELOPMENTAL SERVICES

Supervisor	Designed	Drawn
Approver	Designer	Author

DSA App No.	SFM Permit No.
N/A	25-S-3083-C-DR

Sheet Title
DUPLEX (BLDG 100) PLUMBING DEMO PLAN

Project Number
000000000006803

Sheet Scale

Sheet Number
PC11

1 DUPLEX (BLDG 100) PLUMBING DEMO PLAN — 1/4" = 1'-0"

capital engineering
RANCHO CORDOVA, CALIFORNIA
JD - JH — PM - DESIGN TEAM
200502.00 — PROJECT NO.

Copyright © 2021, California Department of General Services - Real Estate Services Division

ISSUE DATE: OCTOBER 28, 2026

8/27/2025 10:12:18 AM C:\Users\all OneDrive - Capital\Documents\200502.00_Porterville_Staff_Residences_MP22_Central_Alex.rvt

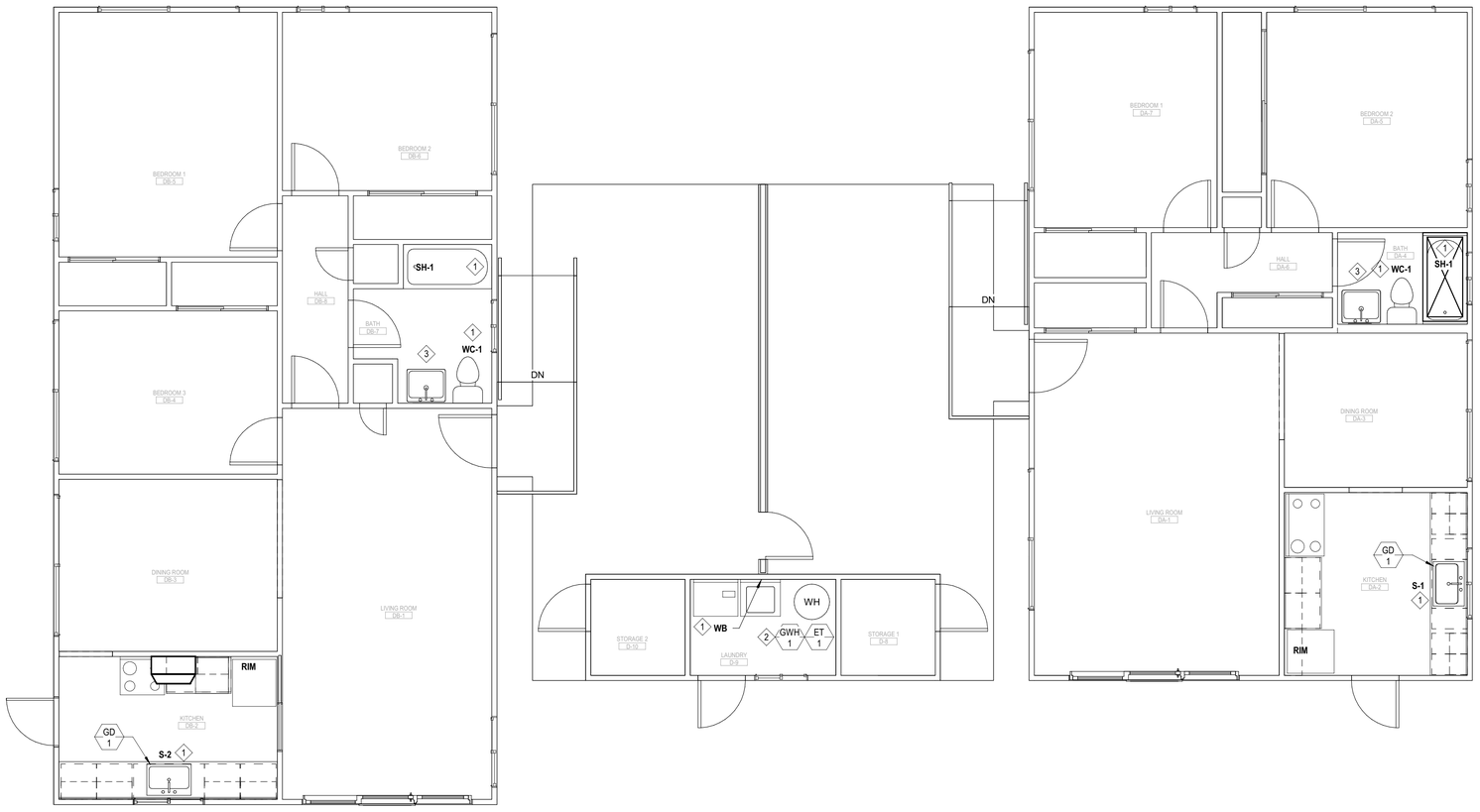

KEYNOTES:

1. INSTALL (N) PLUMBING FIXTURE. RECONNECT TO (E) PIPES.
2. INSTALL (N) WATER HEATER. RECONNECT TO (E) PIPES.
3. RECONNECT (E) PLUMBING BRANCH PIPING TO (E) BATHROOM SINK (REINSTALLED).

THE SCOPE OF WORK INVOLVED IN THIS PROJECT IS EXEMPT FROM THE DIVISION OF THE STATE ARCHITECT ACCESSIBILITY REQUIREMENTS IN ACCORDANCE WITH TITLE 24, CALIFORNIA CODE OF REGULATIONS, 2016 CALIFORNIA BUILDING CODE.

OFFICE OF THE STATE FIRE MARSHAL
APPROVED FIRE AND PANIC ONLY
09/29/25
25-3083
Approval of this plan does not authorize or approve any omission or deviation from applicable regulations. Final approval is subject to field inspection. One set of approved plans shall be available on the project site at all times.

Department of General Services
Architecture & Engineering Sections
State of California
Real Estate Services Division
Project Management & Development Branch
707 Third Street, Suite 4-105
West Sacramento, California 95605

REGISTERED PROFESSIONAL ENGINEER
KEVIN D. STTLER
M 33498
EXPIRES 9/30/26
MECHANICAL
STATE OF CALIFORNIA

DATE SIGNED: 12/13/24

Issue No.	Date	Description

Project
STAFF RESIDENCES REHABILITATION

PORTERVILLE, CA 93257

DEVELOPMENTAL SERVICES

Supervisor	Designed	Drawn
Approver	Designer	Author

DSA App No.	SFM Permit No.
N/A	25-S-3083-C-DR

Sheet Title
DUPLEX (BLDG 100) PLUMBING PLAN

Project Number
000000000006803

Sheet Scale

Sheet Number
PC21

capital engineering
RANCHO CORDOVA, CALIFORNIA
JD - JH PM - DESIGN TEAM
200502.00 PROJECT NO.

1 DUPLEX (BLDG 100) PLUMBING PLAN — 1/4" = 1'-0"

Copyright © 2021, California Department of General Services- Real Estate Services Division

ISSUE DATE: OCTOBER 28, 2026

C:\Users\all\OneDrive - Capital\Documents\200502.00_Porterville_Staff_Residences_MP22_Central_Alex.rvt
8/27/2025 10:12:18 AM

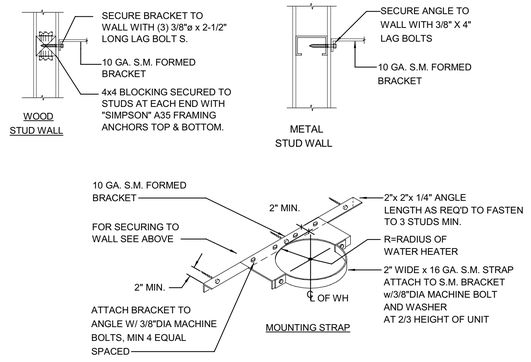

WATER HEATER MOUNTING - TANK

1
P500

SCALE : NONE

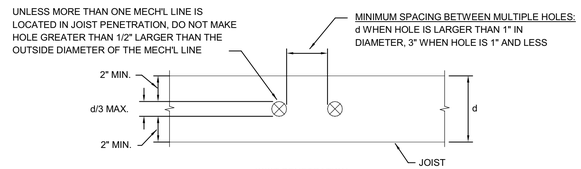

PENETRATIONS IN WOOD FRAMING

2
P500

SCALE : NONE

THE SCOPE OF WORK INVOLVED IN THIS PROJECT IS EXEMPT FROM THE DIVISION OF THE STATE ARCHITECT ACCESSIBILITY REQUIREMENTS IN ACCORDANCE WITH TITLE 24, CALIFORNIA CODE OF REGULATIONS, 2016 CALIFORNIA BUILDING CODE.

OFFICE OF THE STATE FIRE MARSHAL
APPROVED FIRE AND PANIC ONLY
09/29/25
25-3083
Approval of this plan does not authorize or approve any omission or deviation from applicable regulations. Final approval is subject to field inspection. One set of approved plans shall be available on the project site at all times.

GENERAL SERVICES
Department of General Services
Architecture & Engineering Sections
State of California
Real Estate Services Division
Project Management & Development Branch
707 Third Street, Suite 4-105
West Sacramento, California 95605

REGISTERED PROFESSIONAL ENGINEER
KEVIN D. STTLER
M 33498
EXPIRES 9/30/26
MECHANICAL
STATE OF CALIFORNIA

DATE SIGNED: 12/13/24

Issue		
No.	Date	Description

Project
STAFF RESIDENCES REHABILITATION

PORTERVILLE, CA 93257

DEVELOPMENTAL SERVICES

Supervisor	Designed	Drawn
Approver	Designer	Author

DSA App No.	SFM Permit No.
N/A	25-S-3083-C-DR

Sheet Title
PLUMBING DETAILS

Project Number
000000000006803

Sheet Scale

Sheet Number
P500

capital engineering
RANCHO CORDOVA, CALIFORNIA
JD - JH PM - DESIGN TEAM
200502.00 PROJECT NO.

Copyright © 2021, California Department of General Services: Real Estate Services Division

RELATIVE BORDER SCALE IN INCHES 0 1 2 3

ISSUE DATE: OCTOBER 28, 2026

8/27/2025 10:12:17 AM C:\Users\all\OneDrive - CapitalDocuments\200502.00_Porterville_Staff_Residences_MP22_Central_Alex.rvt

SYMBOLS LIST

SOME OF THESE SYMBOLS SHOWN MAY NOT BE USED ON THIS PROJECT

POWER DISTIBUTION

- SWITCHGEAR, SWITCHBOARD, DISTRIBUTION BOARD, SUBSTATION OR MOTOR CONTROL CENTER, FLOOR MOUNTED. DOUBLE LINE INDECATES FRONT FACE OF GEAR.
- PANELBOARD, 120/208V, SURFACE MOUNTED ON WALL.
- PANELBOARD, 120/208V, FLUSH MOUNTED IN WALL.
- ELECTRIC MOTOR, NIEC. MAKE POWER CONNECTIONS ONLY AS NOTED ON PLANS.
- (F) INDOOR EXHAUST FAN MOTOR, SINGLE PHASE. MAKE POWER CONNECTIONS TO INCLUDE JUNCTION BOX MOUNTED MANUAL MOTOR STARTER AND DISCONNECT ADJACENT TO FAN WITH 2 #12 CONDUCTORS PLUS GROUND IN 1/2" FLEXIBLE CONDUIT BETWEEN STARTER AND MOTOR.
- P PULLBOX OR HANDHOLE, SIZE AND TYPE AS NOTED ON PLANS.
- A AF SAFETY DISCONNECT SWITCH, 3 POLE, UON. ADJACENT NUMBER INDICATES FUSE SIZE WHEN APPLICABLE. LABELING CONVENTION AS FOLLOWS:

A:	30A, NON-FUSED	AF:	30A, FUSED
B:	60A, NON-FUSED	BF:	60A, FUSED
C:	100A, NON-FUSED	CF:	100A, FUSED
D:	200A, NON-FUSED	DF:	200A, FUSED
E:	400A, NON-FUSED	EF:	400A, FUSED
F:	600A, NON-FUSED	FF:	600A, FUSED
G:	800A, NON-FUSED	GF:	800A, FUSED

- 1 MAGNETIC MOTOR STARTER. ADJACENT NUMBER INDICATES NEMA SIZE OF STARTER.
- 1 COMBINATION MAGNETIC MOTOR STARTER WITH OVERCURRENT PROTECTION DISCONNECT. ADJACENT NUMBER INDICATES NEMA SIZE OF STARTER.
- PACKAGE MOTOR CONTROLLER OR STARTER FURNISHED AND INSTALLED UNDER ANOTHER DIVISION WITH EQUIPMENT CONTROLLED. PROVIDE SINGLE-POINT POWER SERVICE CONNECTION UNDER THIS DIVISION AS NOTED ON PLANS.
- DRIVEN GROUND ROD.
- DRIVEN GROUND ROD IN GROUND WELL WITH COVER.
- GROUP MOUNTED MOLDED CASE CIRCUIT BREAKER.
- M PRIVATE METER, MOUNTED INTEGRAL WITH OVERCURRENT PROTECTION OR SEPARATE WITHIN SWITCHGEAR.
- M PRIVATE METER, MOUNTED IN SEPARATE ENCLOSURE FROM SWITCHGEAR.
- CONNECTION TO GROUND.

WIRING DEVICES

- JUNCTION BOX, WALL MOUNTED, +18" UON.
- JUNCTION BOX, MOUNTED IN FLUSH FLOOR BOX.
- J JUNCTION BOX, MOUNTED FLUSH IN CEILING.
- J JUNCTION BOX, SURFACE OR PENDANT MOUNTED TO STRUCTURE IN ACCESSIBLE CEILING SPACE.
- JUNCTION BOX, MOUNTED ON CONDUIT STANCHION FLOOR PENETRATION, +12" UON.
- SINGLE-PLEX CONVENIENCE RECEPTACLE DEVICE, WALL MOUNTED, +18" UON.
- DUPLEX CONVENIENCE RECEPTACLE DEVICE, WALL MOUNTED, +18" UON. ADJACENT LETTERING DENOTED BELOW APPLY TO ALL RECEPTACLE DEVICES WHEN SHOWN ON DRAWINGS.
  - A: ARC FAULT CURRENT INTERRUPTER (AFCI)
  - G: GROUND FAULT CURRENT INTERRUPTER (GFCI)
  - IG: ISOLATED GROUND
  - U: INTEGRAL USB PORTS
  - WP: WEATHER-RESISTANT, GROUND FAULT CURRENT INTERRUPTER (GFCI) WITH WEATHERPROOF "IN USE" COVER
- DOUBLE DUPLEX CONVENIENCE RECEPTACLE DEVICE, WALL MOUNTED, +18" UON.
- DUPLEX CONVENIENCE RECEPTACLE DEVICE, WALL MOUNTED OVER COUNTER, 6" ABOVE BACK SPLASH UON, BUT NO HIGHER THAN ADA REQUIREMENTS.
- DUPLEX CONVENIENCE RECEPTACLE DEVICE, SPLIT-WIRED, WALL MOUNTED, +18" UON.
- SPECIALTY OUTLET DEVICE, NEMA CONFIGURATION TYPE AS NOTED ON PLANS, WALL MOUNTED, +18" UON.
- DUPLEX CONVENIENCE RECEPTACLE DEVICE, MOUNTED FLUSH IN CEILING.
- S^T SINGLE-POLE, MANUAL DISCONNECT SWITCH WITH THERMAL OVERLOAD ELEMENT, MOUNTED ADJACENT TO MOTOR.

TELECOMMUNICATIONS

- TELECOMMUNICATION DEVICE, 1 CAT6 DATA DROP UON, WALL MOUNTED, +18" UON.
- TELECOMMUNICATION DEVICE, 1 CAT6 DATA DROP UON, WALL MOUNTED +42" OR 6" ABOVE BACK SPLASH, UON, BUT NO HIGHER THAN ADA REQUIREMENTS.
- V TELEPHONE JACK, WALL MOUNTED, +18" UON. 1 CAT 5E CABLE FROM DEVICE TO TELEPHONE WIRING BLOCK IN GARAGE.
- TELEVISION JACK, WALL MOUNTED +18" UON.

LIGHTING CONTROL

- S SINGLE-POLE, SINGLE-THROW SWITCH, WALL MOUNTED, +42" UON.
- S^3 THREE-WAY SWITCH, WALL MOUNTED, +42" UON.
- S^D WALL BOX DIMMER SWITCH, +42" UON. SIZED PER CONNECTED LOAD ON PLANS AND FURNISHED FOR LAMP SOURCE SERVED. PROVIDED FOR DE-RATING WHEN INSTALLED GANGED LOCATIONS.
- S^{TC} SINGLE-POLE, TIMER CONTROLLED SWITCH, WALL MOUNTED, +42" UON.
- D SINGLE ZONE DIMMER SWITCH WITH ON/OFF/DIM CAPABILITIES, WALL MOUNTED, +42" UON.
- S SINGLE ZONE SWITCH WITH ON/OFF CAPABILITIES, WALL MOUNTED, +42" UON.
- M OCCUPANCY SENSOR, CEILING MOUNTED FOR AREA COVERAGE.
- M LIGHTING CONTROL OCCUPANCY SENSOR WITH SINGLE LEVEL SWITCHING, WALL MOUNTED, +42" UON.

CONVENTIONS

- (1) NUMBERED NOTE, APPLIES TO ALL DRAWINGS.
- 1 NUMBERED SHEET NOTE, APPLIES TO DRAWING CONTAINING NOTES ONLY.
- (1) OVERCURRENT PROTECTIVE DEVICE SPACE IDENTIFICATION TAG. REFERS TO LOCATION OF PROTECTIVE OR CONTROL DEVICE WITHIN SWITCHBOARDS, DISTRIBUTION BOARDS, MOTOR CONTROL CENTERS, ETC.
- (NAME) EQUIPMENT IDENTIFICATION TAG: ITEM FURNISHED AND INSTALLED UNDER ANOTHER SECTION AND WIRED UNDER THIS SECTION.
- 2004 FEEDER SIZE. REFER TO FEEDER SCHEDULE.
- 1 / E-801 DETAIL REFERENCE:
  - DETAIL DESIGNATION
  - SHEET NUMBER
- 2 - F3 FIXTURE IDENTIFICATION TAG:
  - FIXTURE TYPE
  - QUANTITY

RACEWAYS

- CONDUIT RUN CONCEALED IN SLAB, UNDER SLAB OR UNDERGROUND.
- CONDUIT RUN CONCEALED IN WALL OR ABOVE CEILING.
- CONDUIT HOMERUN, CONTINUOUS RUN TO PANEL OR EQUIPMENT CABINET. HOMERUN CAN OCCUR ON ANY OF THE ABOVE ROUTING CONDITIONS.
- CONDUIT TURNED UP, CAN OCCUR ON ANY OF THE ABOVE ROUTING CONDITIONS.
- CONDUIT TURNED DOWN, CAN OCCUR ON ANY OF THE ABOVE ROUTING CONDITIONS.
- CONDUIT CAPPED OR STUBBED WITH INSULATING BUSHINGS, CAN OCCUR ON ANY OF THE ABOVE ROUTING CONDITIONS.
- CONDUIT SLEEVE, WITH INSULATING BUSHINGS.
- FLEXIBLE METALLIC CONDUIT, EQUIPMENT CONNECTION.
- CROSSMARKS ON BRANCH CIRCUIT CONDUIT RUNS INDICATE THE QUANTITY OF CONDUCTORS AS FOLLOWS (GROUND CONDUCTORS ARE NOT NOTED, BUT SHOULD BE INCLUDED IN EVERY CONDUIT WITH POWER CONDUCTORS):
  1. NO CROSSMARKS INDICATES TWO #12 AWG CONDUCTORS, UON.
  2. THREE TO SIX CROSSMARKS INDICATES THE QUANTITY OF #12 AWG CONDUCTORS, UON.
  3. SEVEN OR MORE CROSSMARKS INDICATES THE QUANTITY OF #10 AWG CONDUCTORS, UON.

LIGHTING

- LUMINAIRE, RECESSED IN CEILING.
- LUMINAIRE, SURFACE OR PENDANT MOUNTED.
- LUMINAIRE, WALL MOUNTED.
- STRIP LUMINAIRE, SURFACE OR PENDANT MOUNTED.
- ROUND DOWNLIGHT LUMINAIRE, RECESSED IN CEILING.
- SQUARE DOWNLIGHT LUMINAIRE, RECESSED IN CEILING.
- DOWNLIGHT, SURFACE OR PENDANT MOUNTED.
- DECORATIVE LUMINAIRE, PENDANT MOUNTED.
- SINGLE-HEAD AREA LUMINAIRE WITH BRACKET ARM AND POLE, MOUNTED TO CONCRETE BASE.
- AREA LUMINAIRE, SURFACE OR RECESSED MOUNTED TO WALL.

FIRE ALARM

- ? COMBINATION SMOKE/CO DETECTOR INITIATING DEVICE, 120V WITH 10 YEAR BATTERY, STRUCTURE MOUNTED TO SURFACE JUNCTION BOX. SENSORS SHALL INTERCONNECT WIRELESSLY WITH OTHER SENSORS IN THE SAME UNIT.

ABBREVIATIONS

A	AMPERES	MCB	MAIN CIRCUIT BREAKER
AFI	ARC FAULT CIRCUIT INTERRUPTER	MLO	MAIN LUGS ONLY
AF	AMPERE OVERCURRENT FRAME SIZE (WHEN APPLIED TO CIRCUIT BREAKERS) OR AMPERE FUSE SIZE (WHEN APPLIED TO FUSES)	MT	EMPTY
		(N)	NEW
		NTS	NOT TO SCALE
AFF	ABOVE FINISHED FLOOR	PNL	PANEL
AIC	ASYMMETRIC INTERRUPTING CURRENT	PVC	POLYVINYL CHLORIDE
AL	ALUMINUM	(R)	EXISTING TO BE REMOVED
AT	AMPERE OVERCURRENT TRIP (WHEN APPLIED TO CIRCUIT BREAKERS)	(RR)	REMOVE AND RELOCATE
		TC	TIME CLOCK
C	CONDUIT	TP	TWISTED-PAIR
CEC	CALIFORNIA ELECTRICAL CODE	TX	TRANSFORMER
CP	CIRCULATION PUMP	TYP	TYPICAL
CU	COPPER	UON	UNLESS OTHERWISE NOTED
(E)	EXISTING TO REMAIN	V	VOLTS
EF	EXHAUST FAN	VA	VOLTS-AMPS
EMT	ELECTRICAL METALLIC TUBING	VFD	VARIABLE FREQUENCY DRIVE
EWH	ELECTRIC WATER HEATER	WAP	WIRELESS ACCESS POINT
F	FUSED	WP	WEATHERPROOF
(F)	FUTURE	1Ø	1-PHASE
FLA	FULL LOAD AMPERES	3Ø	3-PHASE
FMC	FLEXIBLE METAL CONDUIT	1P	1-POLE
G	GROUND	2P	2-POLE
GB	GROUND BUS	3P	3-POLE
GFCI	GROUND FAULT CIRCUIT INTERRUPTER	3W	3-WIRE
GND	GROUND	4W	4-WIRE
GRC	GALVANIZED RIGID CONDUIT		
IMC	INTERMEDIATE METAL CONDUIT		

APPLIANCES

DW	DISHWASHER	GR	GAS RANGE
ED	ELECTRIC DRYER	MW	MICROWAVE
EO	ELECTRIC OVEN/RANGE	RF	REFRIGERATOR
GD	GARBAGE DISPOSER	WM	WASHING MACHINE

ELECTRICAL SHEET INDEX

SHEET NO.	SHEET NAME
E001	SYMBOLS LIST AND SHEET INDEX
E002	SCHEDULES, NOTES & ABBREVIATIONS
E101	OVERALL SITE PLAN
EC10	DEMOLITION PLAN - DUPLEX
EC11	ELECTRICAL PLAN - DUPLEX - 100C/D ORANGE
E300	POWER ONE LINE DIAGRAM & DETAILS

THE SCOPE OF WORK INVOLVED IN THIS PROJECT IS EXEMPT FROM THE DIVISION OF THE STATE ARCHITECT ACCESSIBILITY REQUIREMENTS IN ACCORDANCE WITH TITLE 24, CALIFORNIA CODE OF REGULATIONS, 2016 CALIFORNIA BUILDING CODE.

REVIEW FOR EXEMPTION

DGS GENERAL SERVICES

Department of General Services
Architecture & Engineering Sections
State of California
Real Estate Services Division
Project Management & Development Branch
707 Third Street, Suite 4-105
West Sacramento, California 95605

The Engineering Enterprise
CONSULTING ENGINEERS

REGISTERED PROFESSIONAL ENGINEER #E015404 Exp. 06-30-27 SCOTT WHEELER ELECTRICAL STATE OF CALIFORNIA

SIGNED: 09-17-2026

Issue No.	Date	Description
1	02/05/2021	SFM REVIEW CORRECTION
2	7/14/23	50% PROGRESS SET
3	09/15/23	95% WORKING DRAWINGS

Project: DEVELOPMENT SERVICES

Supervisor	Designed	Drawn
Approver	Designer	Author

DSA App No.	SFM Permit No.
N/A	25-S-3083-C

Sheet Title: SYMBOLS LIST AND SHEET INDEX

Project Number: 000000000006803

Sheet Scale

Sheet Number: E001

© Copyright © 2021, California Department of General Services: Real Estate Services Division

ISSUE DATE: OCTOBER 28, 2026

RELATIVE BORDER SCALE IN INCHES

C:\Users\Shane.Franke\Documents\PSR_ELEC_CENTRAL_DUPLEX_r22_shane.franke.rvt
6/22/2026 11:44:42 AM

LUMINAIRE SCHEDULE

TYPE	MANUFACTURER CATALOG NUMBER	DESCRIPTION	LIGHT SOURCE	WATTAGE	VOLTAGE	DETAIL
F1	LITHONIA CLX-L48-5000LM-SEF-WDL-WD-MVOLT-30K-80CRI-WH OR APPROVED EQUAL	4' x 8.5" LED SURFACE MOUNT STRIP LIGHT WITH WRAPAROUND LENS. 3500K COLOR TEMPERATURE, 80CRI.	LED 5000 LUMENS 3000K 80+CRI	35 W	120 V	4/E301
F2	JUNO SLIMFORM SQUARE JSF-7IN-10LM-30K-90CRI-MVOLT-ZT-WH OR APPROVED EQUAL	NOMINAL 7" SQUARE SLIM SURFACE MOUNTED LED FIXTURE INSTALLED OVER JUNCTION BOX, WITH WHITE PAINTED FINISH AND DIFFUSED LENS. INSTALL PER MANUFACTURER'S INTALLATION INSTRUCTIONS TO MAINTAIN WET LOCATION LISTING.	LED 1000 LUMENS 3000K 90+CRI	13 W	120 V	4/E301
F3	LITHONIA 6JBK-SQ-30K-90CRI-MW OR APPROVED EQUAL	RECESSED LED DOWNLIGHT, WIDE BEAM ANGLE, 6" SQUARE, IC RATED. WHITE FINISH. WET LOCATION LISTED, APPLY SILICONE AROUND PERIMETER OF FLANGE WHERE INSTALLED IN WET LOCATIONS.	LED 770 LUMENS 3000K 90+CRI	10.7 W	120 V	3/E301
F4	LITHONIA FMVCSL-24-MVOLT-30K-90CRI-BN OR APPROVED EQUAL	CONTEMPORARY SQUARE LED VANITY LIGHT WITH ACRYLIC DIFFUSER AND BRUSHED NICKEL HOUSING. 24" LENGTH, WALLMOUNT ABOVE MIRROR.	LED 1304 LUMENS 3000K 90+CRI	26 W	120 V	5/E301
F5	BIG ASS FANS "HAIKU" S3127-20-BCS-0402-C-01 (FAN) WITH SATIN NICKEL LIGHT KIT OR APPROVED EQUAL	CEILING FAN, WITH INTEGRAL LIGHT KIT. ELECTRICAL CHARACTERISTICS NOTED ARE FOR LIGHT FIXTURE ONLY. VERIFY FAN SIZE AND ALL FINISHES WITH STATE.	LED 1280 LUMENS 2700K 85+CRI	38 W	120 V	
F6	VONN VMC31620-AL OR APPROVED EQUAL	LED DECORATIVE PENDANT FIXTURE.	LED 2300 LUMENS 3000K 80+ CRI 50,000 HR L70	38 W	120 V	
F7	PHILIPS LIGHTOLIER SLIMSURFACE S7R-830K-10-W OR APPROVED EQUAL	SURFACE MOUNT ROUND DOWNLIGHTS CENTERED ON EACH WINDOW SECTION IN KITCHEN. CONCEAL WIRING IN CABINET. REFER TO ARCHITECTURAL DRAWINGS FOR MOUNTING LOCATION.	LED 1000 LUMENS 3000K	11 W	120 V	4/E301
F8	JUNO UNDERCABINET LIGHTING USTL1-30K-80CRI-BL WITH MAGXFMR 1C 60W 120 12AC BL OR APPROVED EQUAL	SURFACE MOUNT UNDERCABINET PUCK LIGHTS WITH BLACK FINISH. LIGHTS OPERATE ON 12V. PROVIDE SINGLE 120V-12V TRANSFORMER FOR ALL SIX FIXTURES IN EACH UNIT. REFER TO ARCHITECTURAL DRAWINGS FOR EXACT LOCATION OF EACH FIXTURE.	LED 286 LUMENS 3000K	3.8 W	120 V	
SF1	LITHONIA LIGHTING OLCFM OLCFM-15-DDB OR APPROVED EQUAL	EXTERIOR, LED, ROUND CAST SURFACE MOUNT FIXTURE. MADE OF A RUGGED CAST-ALUMINUM TOP PLATE AND OUTER RING WITH PWDER COAT FINISH AND POLYCARBONATE LENS COVER. 4000K COLOR TEMP.	LED 1000 LUMENS 4000K 85+CRI	16.6 W	120 V	4/E301
SF2	LITHONIA OLF OLF 2RH MO OR APPROVED EQUAL	EXTERIOR WALLPACK SECURITY TYPE FIXTURE. INCLUDES INTEGRAL MOTION SENSOR. 4000K COLOR TEMPERATURE. MOUNT AT +8'AFF, UON.	LED 3100 LUMENS 4000K	25 W	120 V	5/E301
SF3	CALCUTTA CA BGP LED CAB-L20.0-ZE550-120-277V-0-10V DIMMING-BZ-40K-PCL OR APPROVED EQUAL	EXTERIOR WALLPACK. MOUNTED AT +8'AFF UON. DIE CAST ALUMINUM HOUSING WITH POWDER COAT FINISH, PRISMATIC GLASS LENS. INCLUDES PHOTOCELL. 4000K COLOR TEMPERATURE.	LED 1800 LUMENS 4000K	20 W	120 V	5/E301

PROJECT GENERAL NOTES

#	Note
***	EXISTING CONDITIONS
1	THE EXISTING CONDITIONS INDICATED IN THIS DRAWING SET WERE DEVELOPED FROM VARIOUS SOURCES WHICH WERE NOT ALL FIELD VERIFIED AND NOT ALL CONDITIONS ARE SHOWN. LOCATIONS, ROUTING, ELEVATIONS, SIZES, ETC. ARE SHOWN SCHEMATICALLY. CONTRACTOR SHALL VERIFY EXISTING CONDITIONS PRIOR TO CONSTRUCTION.
2	DRAWINGS INDICATE GENERAL ARRANGEMENT OF SYSTEMS AND WORK. FOLLOW DRAWINGS IN LAYING OUT WORK AND CHECK DRAWINGS OF OTHER TRADES TO VERIFY SPACE CONDITIONS. FINAL LOCATIONS SHALL BE ADJUSTED TO MEET FIELD CONDITIONS
3	THE CONTRACTOR SHALL VISIT THE JOBSITE AND VERIFY ALL EXISTING CONDITIONS BEFORE CONSTRUCTION AND SHALL INCLUDE IN THE BID THE NECESSARY COSTS TO CONSTRUCT THIS PROJECT IN ACCORDANCE WITH THE ELECTRICAL DRAWINGS, SPECIFICATIONS AND ALL APPLICABLE CODES.
***	DEMO & GENERAL CONDITIONS
4	CONTRACTOR SHALL REMOVE ALL LEFT OVER CONDUIT, WIRE, SCRAPS, ETC. AND LEAVE PREMISES CLEAN AND FREE OF TRASH OR DEBRIS RESULTING FROM THEIR WORK.
5	CONTRACTOR SHALL DISCONNECT AND REMOVE ALL DEMOLISHED DEVICES AND FIXTURES AS SHOWN ON DEMOLITION PLAN. TURN OVER TO OWNER EXISTING DEVICES AND FIXTURES THAT ARE NOT REUSED. PROPERLY DISCARD IF THE OWNER DOES NOT WANT.
6	RECONNECT EXISTING DEVICES WHOSE CIRCUITS HAVE BEEN INTERRUPTED BY DEMOLITION BY PROVIDING NEW CONNECTIONS TO ANOTHER EXISTING DEVICE OR PANEL. VERIFY CIRCUIT LOADING ON EXISTING CIRCUIT.
7	WHEN A DEVICE IS REMOVED FROM AN EXISTING WALL WHICH WILL REMAIN, PATCH WALL TO MATCH EXISTING OR NEW FINISH.
8	MOUNTING HEIGHTS SHOWN ARE FROM FINISHED FLOOR TO THE CENTERLINE OF DEVICES, COORDINATE WITH ARCHITECTURAL DRAWINGS.
***	EQUIPMENT, CONDUIT, WIRE, BOXES & DEVICES
9	PROVIDE INDIVIDUAL GFCI RECEPTACLES AT EACH LOCATION SHOWN, DO NOT USE FEED-THRU GFCI TYPE RECEPTACLES. LOCATE RECEPTACLE AT END OF A BRANCH CIRCUIT WIRE
10	WHERE RECEPTACLES ARE LOCATED OUTSIDE OR IN WET/DAMP LOCATIONS PROVIDE WEATHER RESISTANT TYPE, UON.
11	WHERE USED, CONDUIT SIZE SHALL BE 0.50 MINIMUM, U.O.N.
12	ALL CONDUCTORS ON THIS PROJECT SHALL BE COPPER.
13	INSTALL AND CONNECT A CODE SIZED INSULATED OR BARE COPPER GROUNDING CONDUCTOR IN ALL BRANCH CIRCUITS AND FEEDERS.
14	PROVIDE INSULATING BUSHINGS OR INSULATED THROAT ON THE ENDS OF ALL EMPTY CONDUIT SLEEVES AND INSTALL A POLYETHYLENE PULLING ROPE.
15	WHERE CIRCUITS ARE SHOWN ON THE DRAWINGS WITH HOMERUNS THAT SHARE NEUTRAL CONDUCTORS THE CONTRACTOR SHALL PROVIDE HANDLE TIES BETWEEN ALL BRANCH CIRCUIT BREAKER LOADS WHICH SHARE A NEUTRAL.
16	ALL OUTDOOR ELECTRICAL EQUIPMENT SHALL BE WEATHER-PROTECTED AND LISTED FOR EXTERIOR USE.
17	PROVIDE TYPE WRITTEN PANEL SCHEDULES UPDATED TO INCLUDE ALL FIELD MODIFICATIONS AND SCOPE ITEMS ASSOCIATED WITH THIS PROJECT.
18	PROVIDE ENGRAVED NAMEPLATES FOR ELECTRICAL BOARDS AND DISCONNECTS.
19	19. UTILIZE TYPE NM CABLE FOR ALL CONCEALED WIRING.
***	CODE REQUIREMENTS & ELECTRICAL CLEARANCES
20	ALL ELECTRICAL WORK SHALL COMPLY WITH THE LATEST EDITION OF THE CALIFORNIA ELECTRICAL CODE (CEC).
21	CONTRACTOR IS RESPONSIBLE TO SUBMIT REVISED LAYOUT OF EQUIPMENT IN ELECTRICAL SPACES FOR WRITTEN APPROVAL BY ENGINEER IF PROPOSED INSTALLATION LAYOUT DIFFERS FROM CONSTRUCTION DOCUMENTS. SUBMISSION MUST BE APPROVED PRIOR TO RELEASE OF ORDER FOR EQUIPMENT AND PRIOR TO INSTALLATION.
22	REQUIRED ELECTRICAL EQUIPMENT WORKING SPACE DEPTH SHALL NOT BE LESS THAN THAT INDICATED IN CEC TABLE 110.26. THE WIDTH OF THE WORKING SPACE IN FRONT OF THE ELECTRICAL EQUIPMENT SHALL BE THE WIDTH OF THE EQUIPMENT OR 30", WHICHEVER IS GREATER. THIS REQUIREMENT ALSO APPLIES TO DISCONNECT SWITCHES.
23	ALL ELECTRICAL MATERIALS AND EQUIPMENT SHALL BE LISTED BY UNDERWRITERS LABORATORIES AND BEAR THEIR LABEL, OR ETL.
24	WIRING SPACE IN PANELBOARDS SHALL BE DEDICATED TO CONDUCTORS TERMINATED IN THAT ENCLOSURE. PANELBOARDS SHALL NOT BE USED AS PULL AND/OR SPLICE BOXES FOR CONDUCTORS THAT TERMINATE IN OTHER ENCLOSURES. DO NOT SPLICE CONDUCTORS IN EQUIPMENT.
***	COORDINATION
25	REFER TO MECHANICAL & PLUMBING DRAWINGS FOR EXACT LOCATIONS OF EQUIPMENT. PROVIDE ALL LINE VOLTAGE AND LOW VOLTAGE WIRING, CONTROL WIRING, INTERLOCK CABLING, AND CONDUIT REQUIRED.
26	PROVIDE A DISCONNECTING MEANS AT ALL MOTORS, WHETHER INDICATED ON THE PLANS OR NOT.
27	PROVIDE FUSES IN DISCONNECTS FOR MECHANICAL EQUIPMENT AS COORDINATED WITH THE UNITS NAMEPLATE AND MANUFACTURERS INSTALLATION INSTRUCTIONS. FUSES SHALL BE CURRENT LIMITING TYPE.
28	WORK PERFORMED FROM THESE DRAWINGS SHALL ALSO COMPLY WITH THE PROJECT SPECIFICATIONS. IN THE EVENT THAT THERE IS A CONFLICT BETWEEN THE DRAWINGS AND SPECIFICATIONS, THE MORE STRINGENT REQUIREMENT SHALL TAKE PRECEDENT.
29	CONTRACTOR SHALL CONFIRM THAT ALL LIGHTING FIXTURES SPECIFIED, AND THE CEILING TYPES, FIXTURE TRIMS, AND FRAMES ARE ALL COMPATIBLE PRIOR TO THE CONTRACTOR LIGHTING FIXTURE SUBMITTAL.
***	MISCELLANEOUS
30	CONTRACTOR SHALL PREPARE RED LINED AS-BUILT DOCUMENTS REPRESENTING THE ACTUAL FIELD ROUTINGS AND INSTALLATION LOCATIONS FOR ALL ITEMS ON THIS PROJECT.
31	SURFACE MOUNTED CONDUIT WHERE APPROVED, AND INSTALLED, SHALL BE PAINTED TO MATCH THE ARCHITECTURAL FINISHES IN THAT AREA
32	CONDUIT ROUTING (WHERE SHOWN) IS ESSENTIALLY DIAGRAMMATIC. CONTRACTOR SHALL LAYOUT RUNS TO SUIT FILED CONDITIONS AND THE COORDINATION REQUIREMENTS OF OTHER TRADES.
33	BRANCH CIRCUITS AND CABLE SUPPORTS ROUTED IN DIMISING WALLS SHALL ONLY BE SUPPORTED OF STUDS ASSOCIATED WITH THE UNIT THEY ARE SERVING.
34	WHERE DEVICES IN UNITS ARE SHOWN BACK TO BACK PROVIDE 24" BETWEEN DEVICES SEPARATED BY A STUD. NOTIFY THE ARCHITECT IF THIS CRITERIA WILL RESULT IN ADDITIONAL OUTLETS REQUIRED TO MEET NEC SPACING REQUIREMENTS.
35	WHEN SWITCHES AND OUTLETS ARE WITHIN 12" OF EACH OTHER ALIGN VERTICALLY.
36	ALL DEVICES SHOWN TOGETHER SHALL BE GANGED TOGETHER, WHENEVER POSSIBLE.
37	WHERE DEVICES ARE SHOWN NEXT TO EACH OTHER WITH DIFFERENT MOUNTING HEIGHTS, THEY SHALL ALIGN VERTICALLY.
38	PROVIDE ARC-FAULT CIRCUIT INTERRUPTOR (AFCI), COMBINATION TYPE PROTECTION ON BRANCH CIRCUITS SERVING OUTLETS IN DWELLING UNITS EXCEPT IN BATHROOMS, GARAGE, UNFINISHED BASEMENT, AND CRAWL SPACE.

THE SCOPE OF WORK INVOLVED IN THIS PROJECT IS EXEMPT FROM THE DIVISION OF THE STATE ARCHITECT ACCESSIBILITY REQUIREMENTS IN ACCORDANCE WITH TITLE 24, CALIFORNIA CODE OF REGULATIONS, 2016 CALIFORNIA BUILDING CODE.

REVISED FOR EXHIBITION

DGS GENERAL SERVICES

Department of General Services
Architecture & Engineering Sections
State of California
Real Estate Services Division
Project Management & Development Branch

707 Third Street, Suite 4-105
West Sacramento, California 95605

The Engineering Enterprise
CONSULTING ENGINEERS

REGISTERED PROFESSIONAL ENGINEER
#E015450
Exp. 06/30/27
SCOTT WHEELER
ELECTRICAL
STATE OF CALIFORNIA

SIGNED:
09-17-2026

Issue

No.	Date	Description
2	7/14/23	50% PROGRESS SET
3	09/15/23	95% WORKING DRAWINGS

Project

DEVELOPMENT SERVICES

Supervisor	Designed	Drawn
Approver	Designer	Author

DSA App No.	SFM Permit No.
N/A	25-S-3083-C

Sheet Title

SCHEDULES, NOTES & ABBREVIATIONS

Project Number
000000000006803

Sheet Scale

Sheet Number
E002

Copyright © 2021, California Department of General Services - Real Estate Services Division

ISSUE DATE: OCTOBER 28, 2026

RELATIVE BORDER SCALE IN INCHES

6/22/2026 11:44:42 AM C:\Users\Shane.Franke\Documents\PSR_ELEC_CENTRAL_DUPLEX_r22_shane.franke.rvt

NUMBERED SHEET NOTES

1 SEE POWER ONE LINE DIAGRAM ON SHEET E300 FOR INFORMATION ON FEEDER TO BUILDING 100.

GENERAL SHEET NOTES

A. ALL EXISTING SITE TELECOM PATHWAYS ARE EXISTING TO REMAIN.

THE SCOPE OF WORK INVOLVED IN THIS PROJECT IS EXEMPT FROM THE DIVISION OF THE STATE ARCHITECT ACCESSIBILITY REQUIREMENTS IN ACCORDANCE WITH TITLE 24, CALIFORNIA CODE OF REGULATIONS, 2016 CALIFORNIA BUILDING CODE.



1 Overall Site Plan

SCALE: 1" = 50'-0"

RELATIVE BORDER SCALE IN INCHES

0 1 2 3

DGS GENERAL SERVICES

Department of General Services
Architecture & Engineering Sections
State of California
Real Estate Services Division
Project Management & Development Branch

707 Third Street, Suite 4-105
West Sacramento, California 95605

The Engineering Enterprise
CONSULTING ENGINEERS

REGISTERED PROFESSIONAL ENGINEER
#ED15450
Exp. 06/30/27
SCOTT WHEELER
ELECTRICAL
STATE OF CALIFORNIA

SIGNED:
09-17-2026

Issue No.	Date	Description
1	02/05/2021	SFM REVIEW CORRECTION
2	7/14/23	50% PROGRESS SET
3	09/15/23	95% WORKING DRAWINGS

Project

DEVELOPMENT SERVICES

Supervisor	Designed	Drawn
Approver	Designer	Author

DSA App No.	SFM Permit No.
N/A	25-S-3083-C

Sheet Title

OVERALL SITE PLAN

Project Number
000000000006803

Reference North

Sheet Scale

Sheet Number
E101

ISSUE DATE: OCTOBER 28, 2026

Copyright © 2021, California Department of General Services - Real Estate Services Division

C:\Users\Shane.Franke\Documents\PSR_ELEC_CENTRAL_DUPLEX_r22_shane.franke.rvt
6/22/2026 11:44:42 AM

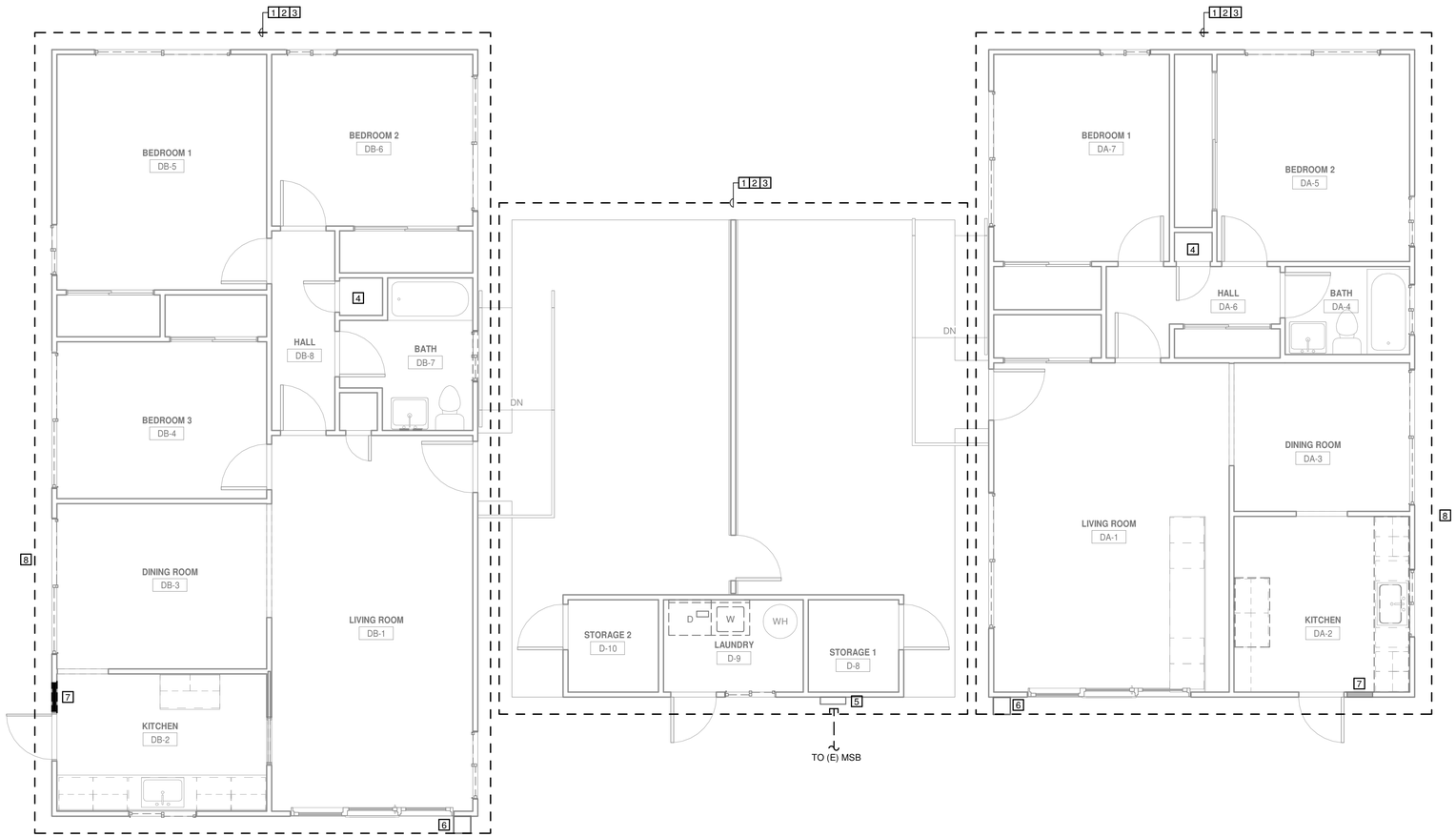

1 DEMOLITION PLAN - DUPLEX

SCALE: 1/4" = 1'-0"

GENERAL SHEET NOTES

A. REFER TO SPECIFICATION 260090, SELECTIVE ELECTRICAL DEMOLITION, FOR ADDITIONAL REQUIREMENTS. ALL ELECTRICAL DEVICES AND WIRING SHALL BE DEMOED UNLESS OTHERWISE NOTED.

B. CONTRACTOR SHALL VISIT THE SITE PRIOR TO BID TO BECOME FAMILIARIZED WITH THE PROJECT SITE AND EXISTING CONDITIONS.

C. REFER TO ARCHITECTURAL DEMOLITION PLANS TO COORDINATE SCOPE OF DEMOLITION.

D. REFER TO MECHANICAL AND PLUMBING DEMOLITION PLANS AND REMOVE DISCONNECTS, CONDUIT, WIRE, BOXES, ETC. AT EQUIPMENT TO BE REMOVED.

E. DISCONNECT AND REMOVE ALL EXISTING DEVICES AND FIXTURES WITHIN THE AREA OF DEMOLITION U.O.N. AT THE OWNER'S DISCRETION. TURN OVER ANY EXISTING REUSABLE OR RECYCLABLE MATERIAL. PROPERLY DISPOSE OF ANY UNWANTED MATERIALS.

F. DEVICES, EQUIPMENT, ETC. SHOW TO BE DEMOLISHED ON THIS PLAN DOES NOT NECESSARILY REPRESENT THE ENTIRE SCOPE OF ELECTRICAL DEMOLITION; REFER TO NUMBERED SHEET NOTES FOR ADDITIONAL DEMOLITION REQUIREMENTS.

NUMBERED SHEET NOTES

1 AREA OF DEMOLITION:
A. REMOVE ALL EXISTING INTERIOR LIGHTING AND LIGHTING CONTROL DEVICES, INCLUDING ALL BRANCH CIRCUIT CONDUIT AND WIRING. RECYCLE EXISTING LAMPS AND BALLASTS PER EPA GUIDELINES.
B. REMOVE ALL EXISTING POWER DEVICES UON, INCLUDING ALL RECEPTACLES AND EQUIPMENT CONNECTIONS, AND REMOVE ALL BRANCH CIRCUITING.
C. REMOVE EXISTING DATA AND TELEPHONE CABLING BACK TO THE EXISTING TELECOM CABINET.
D. REMOVE ALL FIRE ALARM DEVICES.

2 REMOVE ALL EXISTING EXTERIOR LIGHTING AND LIGHTING CONTROL DEVICES FROM BUILDING, INCLUDING ALL BRANCH CIRCUIT CONDUIT AND WIRING. RECYCLE EXISTING LAMPS AND BALLASTS PER EPA GUIDELINES.

3 REMOVE ALL EXTERIOR RECEPTACLES AND EQUIPMENT CONNECTIONS, INCLUDING BRANCH CIRCUITING.

4 EXISTING NETWORK SWITCH AND INCOMING CABLING/CONDUIT TO REMAIN. FIELD CONFIRM EXACT LOCATION.

5 REMOVE EXISTING SERVICE FEEDER JUST OUTSIDE OF BUILDING DURING DEMO PHASE. REMOVE ALL CONDUIT AND WIRING FROM EXTERIOR WALL, ROOF, AND INTERIOR OF BUILDING, REMOVE AERIAL WIRING EQUIPMENT FROM ROOF. REMOVE EXISTING PANEL AND GUTTERS.

6 EXISTING TELEPHONE SERVICE TO REMAIN FOR USE WITH NEW WORK. FIELD CONFIRM EXACT LOCATION.

7 REMOVE EXISTING 100A RECESSED LOAD CENTER. CONDUIT BETWEEN LOAD CENTER AND MAIN SERVICE PANEL TO REMAIN FOR USE WITH NEW PANEL. SEE SHEET EC11 FOR NEW WORK.

8 CONDUIT, WIRING, AND DISCONNECTS FOR HVAC UNITS ON ROOF ARE EXISTING TO REMAIN. STUB CONDUIT AT ROOF. SEE EC11 FOR ADDITIONAL INFORMATION.

THE SCOPE OF WORK INVOLVED IN THIS PROJECT IS EXEMPT FROM THE DIVISION OF THE STATE ARCHITECT ACCESSIBILITY REQUIREMENTS IN ACCORDANCE WITH TITLE 24, CALIFORNIA CODE OF REGULATIONS, 2016 CALIFORNIA BUILDING CODE.

REVISED FOR EXHIBIT SET

GENERAL SERVICES
Department of General Services
Architecture & Engineering Sections
State of California
Real Estate Services Division
Project Management & Development Branch
707 Third Street, Suite 4-105
West Sacramento, California 95605

The Engineering Enterprise
CONSULTING ENGINEERS
REGISTERED PROFESSIONAL ENGINEER #E015454 Exp. 08-31-27 SCOTT WHEELER ELECTRICAL STATE OF CALIFORNIA
SIGNED: 09-17-2026

Issue

No.	Date	Description
1	02/05/2021	SFM REVIEW CORRECTION
2	7/14/23	50% PROGRESS SET
3	09/15/23	95% WORKING DRAWINGS

Project

DEVELOPMENT SERVICES

Supervisor	Designed	Drawn
Approver	Designer	Author

DSA App No.	SFM Permit No.
N/A	25-S-3083-C

Sheet Title
DEMOLITION PLAN - DUPLEX

Project Number
000000000006803

Sheet Scale

Sheet Number
EC10

Copyright © 2021, California Department of General Services: Real Estate Services Division

ISSUE DATE: OCTOBER 28, 2026

RELATIVE BORDER SCALE IN INCHES

24 x 36
C:\Users\Shane.Franke\Documents\PSR_ELEC_CENTRAL_DUPLEX_r22_shane.franke.rvt
6/22/2026 11:44:43 AM

THE SCOPE OF WORK INVOLVED IN THIS PROJECT IS EXEMPT FROM THE DIVISION OF THE STATE ARCHITECT ACCESSIBILITY REQUIREMENTS IN ACCORDANCE WITH TITLE 24, CALIFORNIA CODE OF REGULATIONS, 2016 CALIFORNIA BUILDING CODE.

REVIEW FOR EXEMPTION

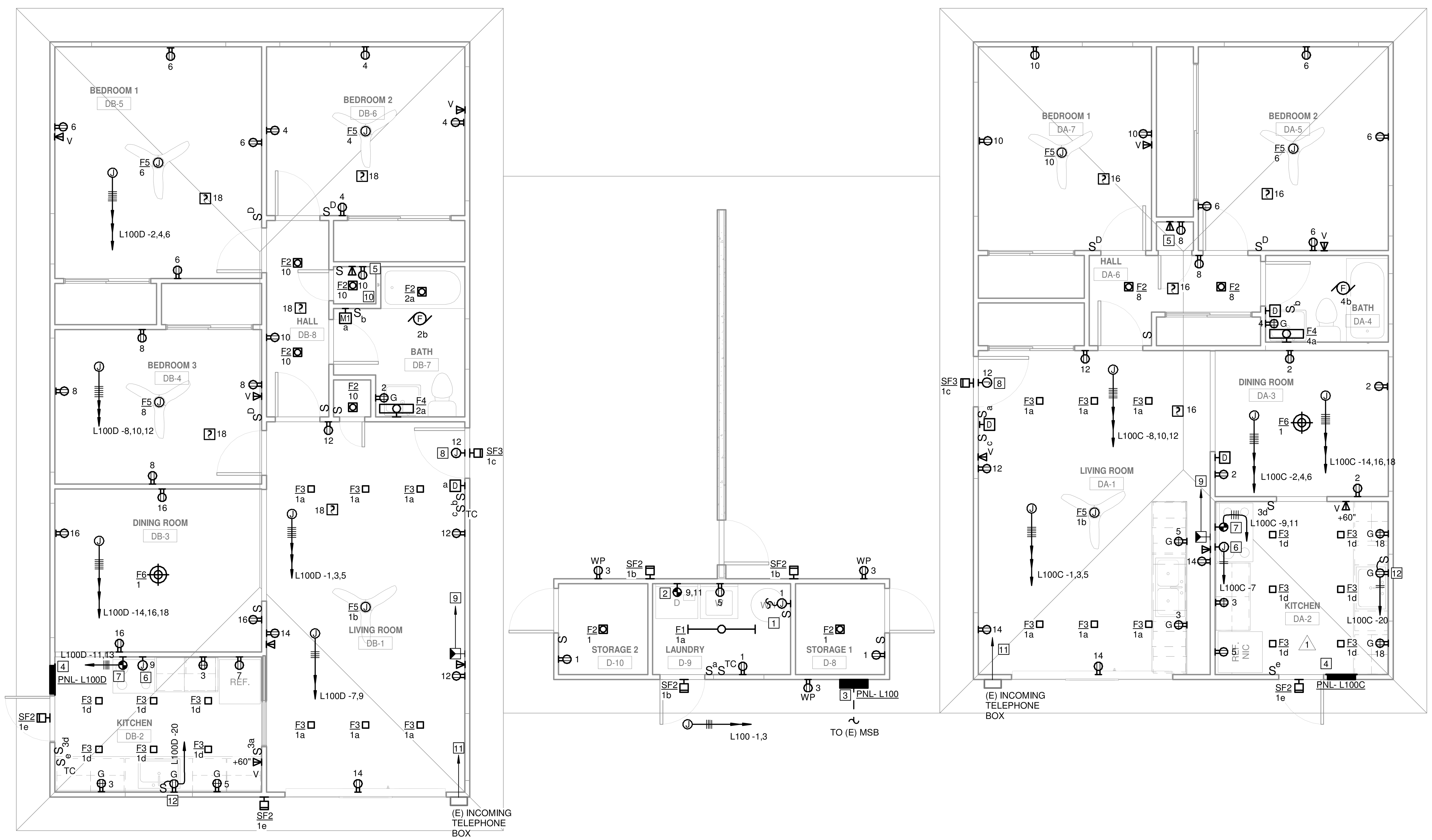

1 ELECTRICAL PLAN - DUPLEX - 100C/D ORANGE

SCALE: 1/4" = 1'-0"

GENERAL SHEET NOTES

A. REFER TO MECHANICAL AND PLUMBING DRAWINGS FOR EXACT LOCATION OF UNITS AND ADDITIONAL INFORMATION ON ELECTRICAL REQUIREMENTS.

B. REFER TO ARCHITECTURAL DRAWINGS FOR LIGHTING AND DEVICE DIMENSIONS, INCLUDING JUNCTION BOXES. CONFIRM ALL MOUNTING HEIGHTS WITH ARCHITECT PRIOR TO ROUGH IN.

C. ALL HOMERUNS SHALL BE IN EMT CONDUIT, 3/4" MIN.

D. ALL DATA CABLES SHALL GO FROM THE DATA OUTLET TO THE NETWORK SWITCH .

NUMBERED SHEET NOTES

1. PROVIDE 120V POWER CONNECTION TO WATER HEATER.
2. PROVIDE 30A, 240V, 2P RECEPTACLE, NEMA 10-30R FOR DRYER.
3. PROVIDE NEW 225A, 120/208V, 1Ø, 2P PANEL. PANEL IS SURFACE MOUNT IN A NEMA 3R ENCLOSURE. PANEL IS IN SAME LOCATION AS PREVIOUS PANEL. EXTEND EXISTING STUBBED FEEDER TO NEW PANEL. REFER TO POWER ONE LINE DIAGRAM FOR FEEDER SIZE.
4. PROVIDE A NEW 100A, 120/208V, 1Ø, 2P PANEL. PANEL IS RECESSED IN WALL AT SAME LOCATION AS PREVIOUS PANEL. EXTEND EXISTING STUBBED HVAC FEEDERS TO NEW PANEL.
5. RELOCATE EXISTING NETWORK SWITCH HERE. PROVIDE NEW CAT 6 FLAT 110-STYLE PATCH PANEL (LEVITON 69586-U89 OR EQUAL) WITH 12-PORT U89 WALLMOUNT BLOCK FOR CONNECTION OF NEW CAT6 CABLES.
6. PROVIDE 120V POWER CONNECTION TO FUME HOOD.
7. PROVIDE N10/50R 120/240V SINGLE PHASE RECEPTACLE FOR OVEN/RANGE. FEEDER SHALL BE 3#6 CU CONDUCTORS IN 1" CONDUIT.
8. PROVIDE 120V POWER TO DOORBELL SYSTEM AT +84"AFF.
9. PROVIDE RG-6 COAXIAL CABLE FROM DEVICE TO NETWORK SWITCH FOR FUTURE TV CONNECTIONS. CABLE MUST HAVE 12" OF EXTRA SLACK, COILED ABOVE NETWORK SWITCH IN GARAGE.
10. PROVIDE 66 STYLE WIRING BLOCK FOR COPPER PHONE LINES (LEVITON 40066-M50 OR EQUAL) WITH 66-STYLE BRIDGING CLIPS AND 89D MOUNTING BRACKET. MOUNT ON WALL NEXT TO TELECOM PATCH PANEL FOR DISTRIBUTION OF CAT 5E PHONE CABLING THROUGHOUT BUILDING.
11. PROVIDE NEW CU CABLING (SAME # OF PAIRS AS INCOMING) FROM EXTERIOR PHONE BOX TO NEW WIRING BLOCK IN GARAGE. CABLE SHALL BE ROUTED THROUGH ATTIC SPACE. FIELD CONFIRM EXACT LOCATION.
12. PROVIDE RECEPTACLE ON DEDICATED CIRCUIT UNDERNEATH THE SINK FOR CARBAGE DISPOSAL. LOCATE SWITCH 6" ABOVE COUNTERTOP.

LOAD CENTER: PNL- L100D

Location: KITCHEN... Served From L100 Phases 1 A.I.C. Rating: Bus Rating 100 A
Mounting: RECESSED Volts: 120/208 Single Wires 3 Main Type: MCB Main Rating: 100 A

Load Served	Amp	Pole	#	A (kVA)		B (kVA)		#	Pole	Amp	Load Served
{1} COMMON AREAS	20 A	1	1	0.24	0.58			2	1	20 A	LTG & REC BATH
{1} REC KITCHEN	20 A	1	3			0.36	0.72	4	1	20 A	{1} LTG & REC BEDROOM
{1} REC KITCHEN	20 A	1	5	0.18	0.72			6	1	20 A	{1} LTG & REC BEDROOM
{1} REFRIGERATOR	20 A	1	7			0.18	0.72	8	1	20 A	{1} LTG & REC BEDROOM
{1} FUME HOOD KITCHEN	20 A	1	9	1.00	0.41			10	1	20 A	{1} LTG & REC HALL
OVEN/RANGE KITCHEN	50 A	2	11			0.50	1.54	12	1	20 A	{1} REC LIVING RM
--	--	--	13	0.50	0.36			14	1	20 A	{1} LTG & REC HALL
{2} ROOFTOP HVAC	30 A	2	15			2.00	0.72	16	1	20 A	{1} LTG & REC DINING ROOM
--	--	--	17	2.00	0.03			18	1	20 A	{3} SMOKE DETECTORS
SPARE	20 A	1	19			0.00	0.18	20	1	20 A	GARBAGE DISPOSAL DB-2
SPARE	20 A	1	21	0.00	0.00			22	1	20 A	SPARE
SPARE	20 A	1	23			0.00	--	24	1	--	space
space	--	1	25	--	--			26	1	--	space
space	--	1	27			--	--	28	1	--	space
space	--	1	29	--	--			30	1	--	space
space	--	1	31			--	--	32	1	--	space
space	--	1	33	--	--			34	1	--	space
space	--	1	35			--	--	36	1	--	space
space	--	1	37	--	--			38	1	--	space
space	--	1	39			--	--	40	1	--	space
space	--	1	41	--	--			42	1	--	space
			Total Load:	6.01 kVA		6.92					
			Total Amps:	58 A		65.37 A					

Load Classification	Conn. Load	Demand Factor	Est. Demand	Panel Totals	
Motor	4 kVA	125.00%	5 kVA	Connected Load:	12.93 kVA
Other	2.39 kVA	100.00%	2.39 kVA	Connected Amps:	62.18 A
Lighting	0.33 kVA	125.00%	0.41 kVA	Est. Demand Load:	14.01 kVA
Receptacles	6.22 kVA	100.00%	6.22 kVA	Est. Demand Amps:	67.38 A

Notes:
{1} AFCI BREAKER
{2} PROVIDE #10 CU CONDUCTORS WITH #CU GROUND TO (E) ROOFTOP HVAC UNIT.
{3} PROVIDE A RED, LOCKING CIRCUIT BREAKER FOR FIRE ALARM CIRCUIT.

Branch Panel: PNL- L100

Location: Served From (E) MSB Phases 1 A.I.C. Rating: 10kAIC Bus Rating 225 A
Mounting: SURFACE Volts: 120/208 Single Wires 3 Main Type: MCB Main Rating: 200 A

Load Served	Amp	Pole	#	A (kVA)		B (kVA)		#	Pole	Amp	Load Served
{1} STORAGE RM	20 A	1	1	1.18	0.00			2	1	20 A	SPARE
REC EXTERIOR	20 A	1	3			0.54	0.00	4	1	20 A	SPARE
{1} WASHER	20 A	1	5	0.18	--			6	1	--	space
SPARE	20 A	1	7			0.00	--	8	1	--	space
DRYER	30 A	2	9	3.12	--			10	1	--	space
--	--	--	11			3.12	--	12	1	--	space
SPARE	20 A	1	13	0.00	--			14	1	--	space
SPARE	20 A	1	15			0.00	--	16	1	--	space
space	--	1	17	--	--			18	1	--	space
space	--	1	19			--	--	20	1	--	space
space	--	1	21	--	--			22	1	--	space
space	--	1	23			--	--	24	1	--	space
space	--	1	25	--	--			26	1	--	space
space	--	1	27			--	--	28	1	--	space
space	--	1	29	--	--			30	1	--	space
space	--	1	31			--	--	32	1	--	space
space	--	1	33	--	--			34	1	--	space
space	--	1	35			--	6.01	36	2	100 A	L101B
space	--	1	37	--	6.92			38	--	--	--
L101A	100 A	2	39			5.95	--	40	1	--	space
--	--	--	41	6.37	--			42	1	--	space
			Total Load:	17.77 kVA		15.62					
			Total Amps:	168 A		150.23 A					

Load Classification	Conn. Load	Demand Factor	Est. Demand	Panel Totals	
Motor	8 kVA	112.50%	9 kVA	Connected Load:	33.39 kVA
Other	11.51 kVA	100.00%	11.51 kVA	Connected Amps:	160.54 A
Lighting	0.73 kVA	125.00%	0.91 kVA	Est. Demand Load:	32.99 kVA
Receptacles	13.16 kVA	87.99%	11.58 kVA	Est. Demand Amps:	158.62 A

Notes:
{1} AFCI BREAKER

LOAD CENTER: PNL- L100C

Location: KITCHEN... Served From L100 Phases 1 A.I.C. Rating: 10kAIC Bus Rating 100 A
Mounting: RECESSED Volts: 120/208 Single Wires 3 Main Type: MCB Main Rating: 100 A

Load Served	Amp	Pole	#	A (kVA)		B (kVA)		#	Pole	Amp	Load Served
{1} COMMON AREAS	20 A	1	1	0.21	0.72			2	1	20 A	{1} REC RM DINING RM
{1} REC KITCHEN	20 A	1	3			0.36	0.57	4	1	20 A	LTG & REC BATH
{1} REFRIGERATOR	20 A	1	5	0.36	0.72			6	1	20 A	{1} LTG & REC BEDROOM
{1} FUME HOOD KITCHEN	20 A	1	7			1.00	0.39	8	1	20 A	{1} LTG & REC BEDROOM
OVEN/RANGE KITCHEN	50 A	2	9	0.50	0.54			10	1	20 A	{1} LTG & REC BEDROOM
--	--	--	11			0.50	1.36	12	1	20 A	{1} REC RM LIVING RM
{2} ROOFTOP HVAC	30 A	2	13	2.00	0.54			14	1	20 A	{1} REC RM LIVING RM
--	--	--	15			2.00	0.02	16	1	20 A	{3} SMOKE DETECTORS
SPARE	20 A	1	17	0.00	0.36			18	1	20 A	{1} REC DA-2
SPARE	20 A	1	19			0.00	0.18	20	1	20 A	GARBAGE DISPOSAL DA-2
space	--	1	21	--	0.00			22	1	20 A	SPARE
space	--	1	23			--	--	24	1	--	space
space	--	1	25	--	--			26	1	--	space
space	--	1	27			--	--	28	1	--	space
space	--	1	29	--	--			30	1	--	space
space	--	1	31			--	--	32	1	--	space
space	--	1	33	--	--			34	1	--	space
space	--	1	35			--	--	36	1	--	space
space	--	1	37	--	--			38	1	--	space
space	--	1	39			--	--	40	1	--	space
space	--	1	41	--	--			42	1	--	space
			Total Load:	5.95 kVA		6.37					
			Total Amps:	57 A		60.73 A					

Load Classification	Conn. Load	Demand Factor	Est. Demand	Panel Totals	
Motor	4 kVA	125.00%	5 kVA	Connected Load:	12.32 kVA
Other	2.38 kVA	100.00%	2.38 kVA	Connected Amps:	59.25 A
Lighting	0.26 kVA	125.00%	0.33 kVA	Est. Demand Load:	13.39 kVA
Receptacles	5.68 kVA	100.00%	5.68 kVA	Est. Demand Amps:	64.37 A

Notes:
{1} AFCI BREAKER
{2} PROVIDE #10 CU CODADNDUCTORS WITH #CU GROUND TO (E) ROOFTOP HVAC UNIT.
{3} PROVIDE RED, LOCKING CIRCUIT BREAKER FOR FIRE ALARM CIRCUIT.

N

DGS GENERAL SERVICES
Department of General Services
Architecture & Engineering Sections
State of California
Real Estate Services Division
Project Management & Development Branch
707 Third Street, Suite 4-105
West Sacramento, California 95605

The Engineering Enterprise
CONSULTING ENGINEERS

REGISTERED PROFESSIONAL ENGINEER #E01549 Exp. 06/30/27 SCOTT WHEELER ELECTRICAL STATE OF CALIFORNIA
SIGNED: 09-17-2026

Issue

No.	Date	Description
1	02/05/2021	SFM REVIEW CORRECTION
2	7/14/23	50% PROGRESS SET
3	09/15/23	95% WORKING DRAWINGS
4	04/22/26	ADDENDUM 2

Project: DEVELOPMENT SERVICES

Supervisor: Approver | Designed: Designer | Drawn: Author

DSA App No.: N/A | SFM Permit No.: 25-S-3083-C

Sheet Title: ELECTRICAL PLAN - DUPLEX - 100C/D ORANGE

Project Number: 000000000006803

Sheet Scale

Sheet Number: EC11

Copyright © 2021, California Department of General Services- Real Estate Services Division

RELATIVE BORDER SCALE IN INCHES

ISSUE DATE: OCTOBER 28, 2026

C:\Users\Shane.Franke\Documents\PSR_ELEC_CENTRAL_DUPLEX_r22_shane.franke.rvt
6/22/2026 11:44:45 AM
24 x 36

NUMBERED SHEET NOTES

1. REPLACE (E) #2/0 CONDUCTORS IN 2" CONDUIT WITH NEW FEEDER AS SHOWN.
2. REPLACE EXISTING 125A BREAKER WITH NEW 200A, 2P BREAKER.

THE SCOPE OF WORK INVOLVED IN THIS PROJECT IS EXEMPT FROM THE DIVISION OF THE STATE ARCHITECT ACCESSIBILITY REQUIREMENTS IN ACCORDANCE WITH TITLE 24, CALIFORNIA CODE OF REGULATIONS, 2016 CALIFORNIA BUILDING CODE.

REVISED FOR EXEMPTION

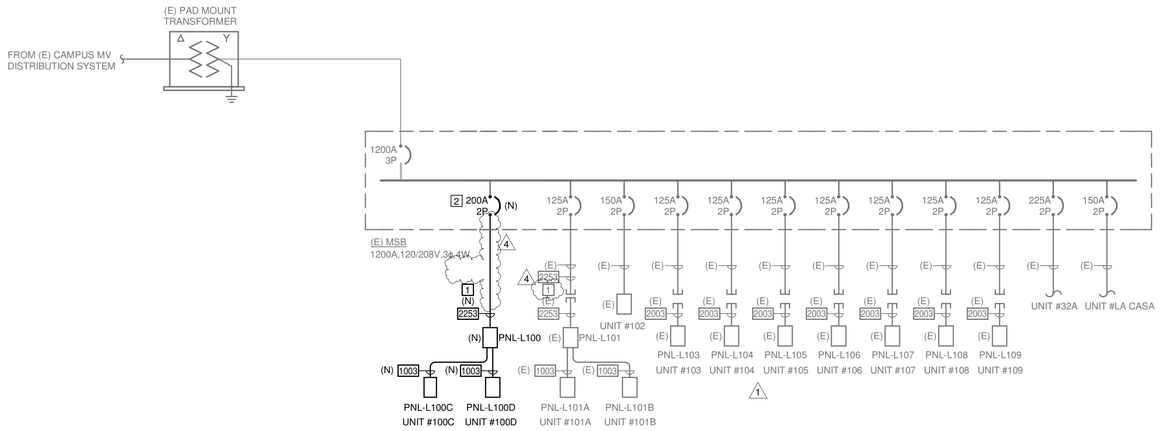

1 MODIFIED POWER ONE-LINE DIAGRAM

SCALE: NTS NEW FEEDERS/EQUIPMENT ARE IN BOLD

FEEDER SCHEDULE

FEEDER SCHEDULE GENERAL NOTES

1. COPPER FEEDER SIZES SHOWN IN THIS SCHEDULE ARE BASED ON CONDUCTORS WITH THHN/THWN-2 INSULATION IN EMT CONDUIT.
2. FEEDER SIZES SHOWN IN THIS SCHEDULE ARE BASED ON AN AMBIENT TEMPERATURE OF 30 DEGREES C (86 DEGREES F).
3. FEEDERS CONSISTING OF MULTIPLE SETS OF CONDUCTORS AND CONDUITS ARE TO BE PROVIDED WITH THE INDICATED SIZE GROUND CONDUCTOR IN EACH CONDUIT.
4. PER CEC ARTICLE 110.14, ALL FEEDERS SIZED AT #2 AWG OR LESS ARE CALCULATED PER 60 DEGREE TABLE. FEEDERS GREATER THAN #2 AWG ARE RATED 75 DEGREE.

FEEDER SCHEDULE REMARKS

A. FEEDER GROUND AND BONDING JUMPER SHALL HAVE AN AREA NOT LESS THAN 12.5% OF THE AREA OF THE LARGEST PHASE CONDUCTOR.
B. INCREASE CONDUIT TO THE NEXT LARGER TRADE SIZE WHEN USING SCHEDULE 40 OR 80 PVC CONDUIT.
C. PER CEC SECTION 240.4(B), FOR OVERCURRENT DEVICES RATED 800A OR LESS, THE NEXT HIGHER STANDARD OVERCURRENT DEVICE RATING (ABOVE THE AMPACITY OF THE CONDUCTORS) CAN BE USED. RULE CAN NOT BE APPLIED IF 100% RATED BREAKERS ARE USED.

FEEDER TAG	FEEDER DESCRIPTION	CONDUIT	CONDUCTORS		SEPARATELY DERIVED SYSTEM		REMARKS
			PHASE/NEUTRAL	GROUND	GROUNDING ELECTRODE	BONDING JUMPER	
1003	95 AMP, 3 WIRE	1-1.25"	3 #2 CU	1 #8 CU	-	-	B,C
2003	200 AMP, 3 WIRE	1-2.00"	3 #3/0 CU	1 #6 CU	-	-	-
2253	230 AMP, 3 WIRE	1-2.50"	3 #4/0 CU	1 #4 CU	-	-	-

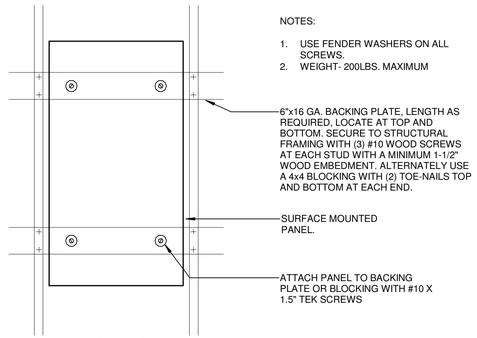

SURFACE MOUNTED PANEL, WOOD OR STEEL FRAMING - ELEVATION VIEW

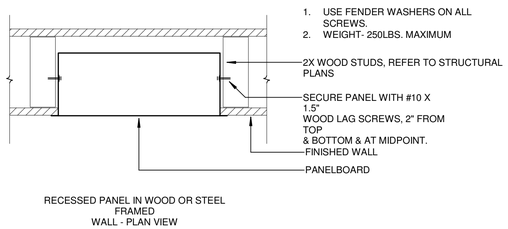

RECESSED PANEL IN WOOD OR STEEL FRAMED WALL - PLAN VIEW

2 SURFACE OR RECESSED PANELBOARD

SCALE: 12" = 1'-0"

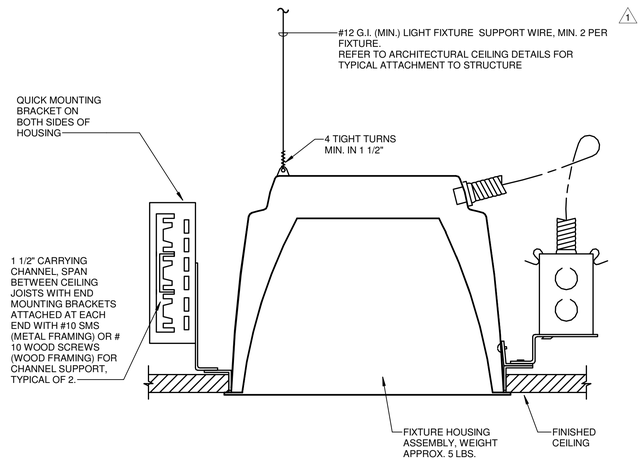

3 RECESSED DOWNLIGHT

SCALE:NTS

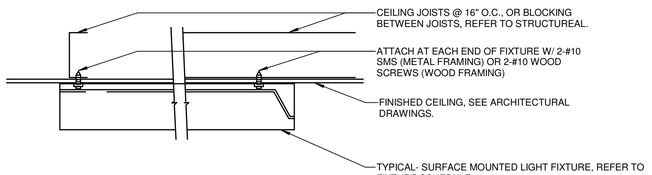

4 SURFACE MOUNTED LUMINAIRE

SCALE:NTS

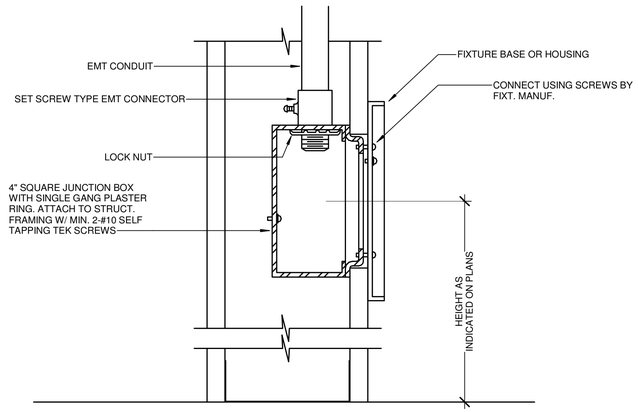

GENERAL NOTE:

FOR FIXTURES OVER 16" IN LENGTH OR OVER 15 LBS., CONTRACTOR IS TO PROVIDE #16 GAUGE STEEL BACKING ATTACHED TO (3) STUDS WITH (2) #8 SHEET METAL SCREWS PER STUD. ATTACH FIXTURE TO BACKING WITH #10 X 1.5" TEK SCREWS.

5 WALL MOUNTED LUMINAIRE

SCALE:NTS

GENERAL SERVICES
Department of General Services
Architecture & Engineering Sections
State of California
Real Estate Services Division
Project Management & Development Branch
707 Third Street, Suite 4-105
West Sacramento, California 95605

The Engineering Enterprise
CONSULTING ENGINEERS
REGISTERED PROFESSIONAL ENGINEER #ED15429 Exp.06/30/27 SCOTT WHEELER ELECTRICAL STATE OF CALIFORNIA
SIGNED: 09-17-2026

Issue No.	Date	Description
1	02/05/2021	SFM REVIEW CORRECTION
2	7/14/23	50% PROGRESS SET
3	09/15/23	95% WORKING DRAWINGS
4	04/22/26	ADDENDUM 2

Project

DEVELOPMENT SERVICES

Supervisor	Designed	Drawn
TEE	TEE	TEE

DSA App No.	SFM Permit No.
N/A	25-S-3083-C

Sheet Title
POWER ONE LINE DIAGRAM & DETAILS

Project Number
000000000006803

Sheet Scale

Sheet Number
E300

Copyright © 2021, California Department of General Services- Real Estate Services Division

ISSUE DATE: OCTOBER 28, 2026

C:\Users\Shane.Franke\Documents\PSR_ELEC_CENTRAL_DUPLEX_r22_shane.franke.rvt
6/22/2026 11:44:43 AM

RELATIVE BORDER SCALE IN INCHES

DEVELOPMENTAL SERVICES

STAFF RESIDENCES REHABILITATION BLDG 104

26501 AVENUE 140
PORTERVILLE, TULAR COUNTY
CA 93257

PROJECT NUMBER : 000000000006803
SFM APPLICATION NUMBER: 25-S-3084-C-NW (PREVIOUSLY APPROVED AS 20-S-2688-C)



THE SCOPE OF WORK INVOLVED IN THIS PROJECT IS EXEMPT FROM THE DIVISION OF THE STATE ARCHITECT ACCESSIBILITY REQUIREMENTS IN ACCORDANCE WITH TITLE 24, CALIFORNIA CODE OF REGULATIONS, 2016 CALIFORNIA BUILDING CODE.

OFFICE OF THE STATE FIRE MARSHAL
APPROVED FIRE AND PANIC ONLY
01/21/26
25-3084
Approval of this plan does not authorize or approve any omission or deviation from applicable regulations. Final approval is subject to field inspection. One set of approved plans shall be available on the project site at all times.

ACCESSIBILITY NOTES

ACCESSIBLE PATH OF TRAVEL:

ACCESSIBLE PATH PER APPLICABLE CALIFORNIA BUILDING CODE PROVISIONS AND PER THE FOLLOWING DEFINITION IN CBC SECTION 202:

SUBSTANTIAL IMPROVEMENT: ANY REPAIR, RECONSTRUCTION, REHABILITATION, ALTERATION, ADDITION OR OTHER IMPROVEMENT OF BUILDING OR STRUCTURE, THE COST OF WHICH EQUALS OR EXCEEDS 50 PERCENT OF THE MARKET VALUE OF THE STRUCTURE BEFORE THE IMPROVEMENT OR REPAIR IS STARTED. ...THE TERM DOES NOT, HOWEVER, INCLUDE.....:
2. ANY ALTERATION OF A HISTORIC STRUCTURE PROVIDED THAT THE ALTERATION WILL NOT PRECLUDE THE STRUCTURE'S CONTINUED DESIGNATION AS A HISTORIC STRUCTURE.

SINCE THIS BUILDING QUALIFIES AS HISTORIC, IT IS NOT REQUIRED TO COMPLY WITH CBC SECTION 11B-233.1.1 RESIDENTIAL DWELLING UNITS WITH MOBILITY FEATURES.

SINCE THIS BUILDING IS NOT REQUIRED TO COMPLY WITH CBC SECTION 11B-233.3.1.1, IT IS ALSO NOT REQUIRED TO BE LOCATED ON AN ACCESSIBLE ROUTE PER CBC SECTION 11B-233.3.4.2.

APPLICABLE CODES

PARTIAL LIST OF APPLICABLE CODES

2022 CALIFORNIA ADMINISTRATIVE CODE (CAC), PART 1, TITLE 24 CCR
2022 CALIFORNIA BUILDING CODE (CBC), PART 2, TITLE 24 CCR

2022 CALIFORNIA ELECTRICAL CODE (CEC), PART 3, TITLE 24 CCR

2022 CALIFORNIA MECHANICAL CODE (CMC), PART 4, TITLE 24 CCR

2022 CALIFORNIA PLUMBING CODE (CPC), PART 5, TITLE 24 CCR

2022 CALIFORNIA ENERGY CODE (CEC), PART 6, TITLE 24 CCR
2022 CALIFORNIA FIRE CODE (CFC), PART 9, TITLE 24 CCR

2022 CALIFORNIA EXISTING BUILDING CODE (CEBC), PART 10, TITLE 24 CCR
2022 CALIFORNIA HISTORIC BUILDING CODE

2022 CALIFORNIA REFERENCED STANDARDS CODE, PART 12, TITLE 24 CCR
TITLE 19 CCR, PUBLIC SAFETY, STATE FIRE MARSHAL REGULATIONS

PARTIAL LIST OF APPLICABLE STANDARDS

FOR A COMPLETE LIST OF APPLICABLE NFPA STANDARDS REFER TO 2022 CBC (SFM) CHAPTER 35 AND CALIFORNIA FIRE CODE (CFC) CHAPTER 80.

SEE CALIFORNIA BUILDING CODE, CHAPTER 35, FOR STATE OF CALIFORNIA AMENDMENTS TO THE NFPA STANDARDS

AMERICANS WITH DISABILITIES ACT 2010 STANDARDS INCLUDING:
- TITLE II REGULATIONS AT 28 CFR PART 35.151 AND;
- 2004 AMERICANS WITH DISABILITIES ACT ACCESSIBLE GUIDELINES (ADAAG) AT 36 CFR PART 1191 APPENDICES D AND C

WHERE THESE TWO DIFFER, 28 CFR PART 35.151 SHALL PREVAIL

1

DEFERRED APPROVAL

1. FIRE ALARM.

SHEET INDEX

GENERAL
GA01 COVER SHEET BLDG 104
GA02 INFORMATION AND CODE REVIEW BLDG 104

HAZMAT
HM001 VICINITY MAP AND FLOOR PLAN

ARCHITECTURAL
AA01 ARCHITECTURAL COVER SHEET
AA10 2 BEDROOM DEMOLITION FLOOR PLAN BLDG 104
AA11 2 BEDROOM FLOOR PLAN BLDG 104
AA12 2 BED REFLECTED CEILING PLAN BLDG 104
AA13 2 BEDROOM ROOF PLAN BLDG 104
AA21 2 BED EXTERIOR ELEVATIONS BLDG 104
AA31 DOOR AND WINDOW TYPES SCHEDULE BLDG 104
AA41 INTERIOR ELEVATIONS AND DETAILS BLDG 104
AA50 VARIOUS DETAILS BLDG 104
AA51 VARIOUS DETAILS BLDG 104

STRUCTURAL
S001 STRUCTURAL GENERAL NOTES
S002 STRUCTURAL MATERIAL & INSPECTION NOTES
SA211 FOUNDATION PLAN - 2 BED
S510 DETAILS
S530 TYPICAL DETAILS

MECHANICAL
M001 HVAC LEGENDS & NOTES
M002 HVAC LEGENDS & NOTES
M003 HVAC SCHEDULES
M004 TITLE 24 COMPLIANCE DOCUMENTS
MA11 2 BEDROOM (BLDG 104) HVAC DEMO PLAN
MA21 2 BEDROOM (BLDG 104) HVAC PLAN
MA22 2 BEDROOM (BLDG 104) HVAC ROOF PLAN
M500 HVAC DETAILS
M600 HVAC CONTROLS

PLUMBING
P001 PLUMBING LEGENDS & NOTES
P002 PLUMBING LEGENDS & NOTES
P003 PLUMBING SCHEDULES
PA11 2 BEDROOM (BLDG 104) PLUMBING DEMO PLAN
PA21 2 BEDROOM (BLDG 104) PLUMBING PLAN
P500 PLUMBING DETAILS

ELECTRICAL
E001 SYMBOLS LIST AND SHEET INDEX
E002 SCHEDULES, NOTES & ABBREVIATIONS
E101 OVERALL SITE PLAN
EA10 DEMOLITION PLAN - 2 BEDROOM
EA11 ELECTRICAL PLAN - 2 BEDROOM 104 ORANGE
E300 POWER ONE LINE DIAGRAM & DETAILS

TOTAL SHEETS: 39

PROJECT TEAM

PROJECT MANAGER:	ART IWASA Art.Iwasa@dgs.ca.gov (916) 376-1737	
ARCHITECTURE:	DAVID SOLOMON -	PROJECT ARCHITECT
	ELENA KELTGEN -	ARCHITECTURAL DESIGNER
STRUCTURAL:	BALI GAURAV -	STRUCTURAL ENGINEER
MECHANICAL:	KEVIN STILLMAN -	PRINCIPAL. CAPITAL ENGINEERING
ELECTRICAL:	SCOTT WHEELER -	PRINCIPAL. THE ENGINEERING ENTERPRISE
HAZARDOUS MATERIAL CONSULTANT:	DAVID WATTS	PRINCIPAL. GEOCON CONSULTANTS, INC

PROJECT LOCATION



PROJECT SCOPE

1. REHABILITATE STAFF 2 BEDROOM DWELLING UNIT (BLDG. 104). REPLACE ROOF, FLOORS, TILES, GYP BOARD WALLS AND CEILINGS, KITCHENS, BATHROOMS, AND PAINT INTERIOR AND EXTERIOR. UPGRADE HVAC, PLUMBING AND ELECTRICAL SYSTEMS.
2. REMOVE ALL EXPOSED CONDUITS, PIPES, WIRES, ETC.
3. REPAIR BRICKS, STUCCO, SLABS, SOFFITS, METAL WINDOWS AND EXTERIOR DOORS.
4. REPAIR/SERVICE SIDEWALKS, DRIVEWAYS, LANDSCAPING.
5. THE BUILDING CONTAINS HAZARDOUS BUILDING MATERIALS AND MUST BE ABATED PRIOR TO STARTING ANY DEMOLITION WORK. REFER TO HAZARDOUS MATERIALS SURVEY.
6. THE STAFF DWELLING UNIT (BLDG 104) AND SURROUNDING AREAS ARE WITHIN A HISTORIC DISTRICT AND ARE BOUND BY THE FEMA PROGRAMMATIC AGREEMENT GOVERNING SECTION 106 REVIEW OF FEMA FUNDED UNDERTAKINGS IN CALIFORNIA

INDEX LEGEND

GA01

- SEQUENCE DESIGNATOR
- SHEET TYPE DESIGNATOR
  EXAMPLE:
  0 - GENERAL 2 - ELEVATIONS
  1 - PLANS # - ETC
- BUILDING LETTER (A = BUILDING 104)
- DISCIPLINE DESIGNATOR
  EXAMPLE:
  G - GENERAL M - MECHANICAL
  C - CIVIL P - PLUMBING
  A - ARCHITECTURE E - ELECTRICAL
  S - STRUCTURAL X - ETC

KEY PLAN

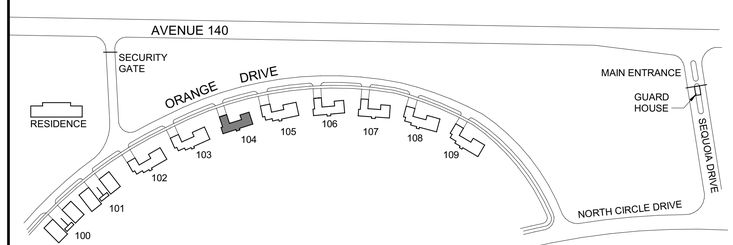

KEY TO HOUSING BLDGS	
104	2 BEDROOM BLDG

DGS GENERAL SERVICES
Department of General Services
Architecture & Engineering Sections
State of California
Real Estate Services Division
Project Management & Development Branch
707 Third Street, Suite 4-105
West Sacramento, California 95605

LICENSED ARCHITECT
DAVID M. SOLOMON
C-22106
REN. 08/30/23
STATE OF CALIFORNIA

Issue

No.	Date	Description
1	12/8/2025	Revision 1
1	08/29/25	

Project
STAFF RESIDENCES REHABILITATION
26501 AVENUE 140
PORTERVILLE, TULARE COUNTY
CA 93257
DEVELOPMENTAL SERVICES

Supervisor	Designed	Drawn
D.S.	E. K.	E. K.

DSA App No. N/A
SFM Permit No. 25-S-3084-C-NW

Sheet Title
COVER SHEET BLDG 104

Project Number
000000000006803

Reference North
Sheet Scale
Sheet Number
GA01

Copyright © 2021, California Department of General Services- Real Estate Services Division

ISSUE DATE: OCTOBER 28, 2026

X:\Projects\00xxxx\006803\RVT\ARC\006803_ARC_CENTRAL_TEST_BLDG 104.rvt
12/8/2025 3:38:16 PM

RELATIVE BORDER SCALE IN INCHES

THE SCOPE OF WORK INVOLVED IN THIS PROJECT IS EXEMPT FROM THE DIVISION OF THE STATE ARCHITECT ACCESSIBILITY REQUIREMENTS IN ACCORDANCE WITH TITLE 24, CALIFORNIA CODE OF REGULATIONS, 2016 CALIFORNIA BUILDING CODE.

OFFICE OF THE STATE FIRE MARSHAL
APPROVED FIRE AND PANIC ONLY

01/21/26
25-3084

Approval of this plan does not authorize or approve any omission or deviation from applicable regulations. Final approval is subject to field inspection. One set of approved plans shall be available on the project site at all times.

BUILDING INFORMATION - 2 BEDROOMBLDG 104

NONSTRUCTURAL PROVISIONS	
OCCUPANCY GROUPS AND VARIED USES	(E) R-3, NOT CHANGING USE
BUILDING CONSTRUCTION TYPE	(E) TYPE V-B, NOT CHANGING USE
NUMBER OF STORIES	(E) SINGLE STORY, NOT INCREASING STORIES
ACTUAL BUILDING HEIGHT	(E) 13'-0" NOT INCREASING HEIGHT
BULDING AREA IN SQUARE FEET	(E) 1st FLOOR 1,100 S.F., (E) GARAGE 325 S.F. = 1,425 S.F
AREA OF PROJECT IN SQUARE FEET	(E) 1,425 S.F. NOT INCREASING SIZE
SEPARATED, NON-SEPARATED, ACCESSORY USE	(E) NON-SEPARATED; NOT CHANGING USE
ALLOWABLE AREA	(E) - NOT INCREASING SIZE OR CHANGING USE
AREA INCREASE	(E) - NOT INCREASING SIZE OR CHANGING USE
HEIGHT INCREASE	(E) - NOT INCREASING SIZE OR CHANGING USE
FIRE SPRINKLERS (TYPE, FULL, PARTIAL)	(E) - NONE, NOT CHANGING USE
FIRE ALARM (TYPE)	YES - SMOKE DETECTORS, LOCAL ANNUNCIATION ONLY
OTHER FIRE PROTECTION SYSTEM (TYPE)	(E) NO
SMOKE CONTROL SYSTEM (Y/N)	(E) NO
OCCUPANT LOAD FOR ENTIRE BUILDING AND EACH FLOOR	8 (E) - NO SIZE OR USE CHANGE
YEAR BUILDING WAS CONSTRUCTED	1953
HIGH FIRE HAZARD SEVERITY ZONE (Y/N)	NO
SEISMIC JOINTS AND LOCATIONS	NO
EMERGENCY RESPONDER RADIO COVERAGE (Y/N)	NO
PART 8,CHBC: LIGHT VENTILATION AREA OF 60% OR 6 SQ.FT IN SLEEPING ROOMS (Y/N)	YES
PART 8,CHBC: RESCUE WINDOWS OF 3.3 SQ.FT W/MIN WIDTH/HEIGHTH OF 18" (Y/N)	YES

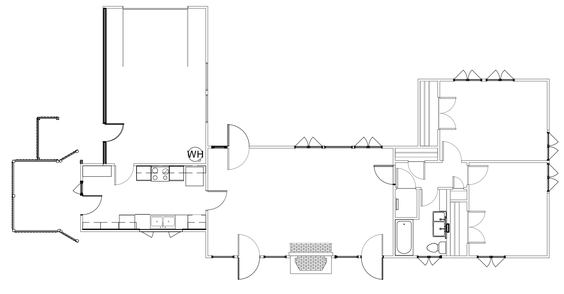

1 2 BEDROOM - FLOOR PLAN-FOR CODE ANALYSIS — NOT TO SCALE

Department of General Services
Architecture & Engineering Sections
State of California
Real Estate Services Division
Project Management & Development Branch
707 Third Street, Suite 4-105
West Sacramento, California 95605

LICENSED ARCHITECT
DAVID M. SOLOMON
C-22108
REN. 08/2025
STATE OF CALIFORNIA

Issue		
No.	Date	Description
1	08/22/25	

Project
STAFF RESIDENCES REHABILITATION

26501 AVENUE 140
PORTERVILLE, TULARE COUNTY
CA 93257

DEVELOPMENTAL SERVICES

Supervisor	Designed	Drawn
D.S.	E. K.	E. K.

DSA App No.	SFM Permit No.
N/A	25-S-3084-C-NW

Sheet Title
INFORMATION AND CODE REVIEW BLDG 104

Project Number
00000000000680A

Reference North | Sheet Scale | Sheet Number GA02

Copyright © 2021, California Department of General Services: Real Estate Services Division

ISSUE DATE: OCTOBER 28, 2026

X:\Projects\00xxxx\006803\RVT\ARC\006803_ARC_CENTRAL_TEST_BLDG 104.rvt
9/8/2025 10:14:43 AM

RELATIVE BORDER SCALE IN INCHES 0 1 2

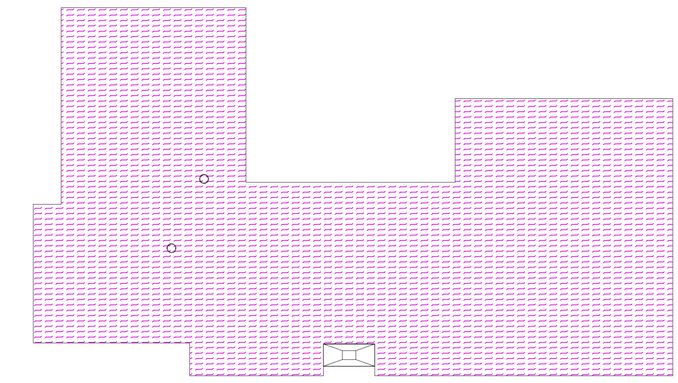

LEGEND:
- Roofing Mastic (likely present under roofing roll)
- Flue (approximate location)

N

0 4 8
APPROX. SCALE: feet
(1/8" = 1'-0")

Developmental Training Activity Center-
Building 104
ROOF PLAN

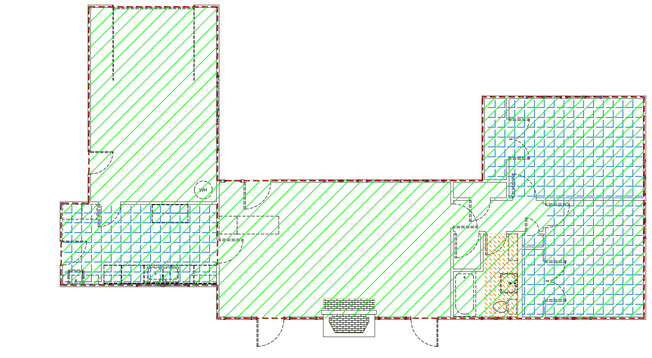

LEGEND:
- Deteriorated Lead Paint
- Gypsum Board
- Floor Tile (9x9)
- Sheet Flooring

N

0 4 8
APPROX. SCALE: feet
(1/8" = 1'-0")

Developmental Training Activity Center-
Building 104
FLOOR PLAN

OFFICE OF THE STATE FIRE MARSHAL
APPROVED FIRE AND PANIC ONLY
01/21/26
25-3084
Approval of this plan does not authorize or approve any omission or deviation from applicable regulations. Final approval is subject to field inspection. One set of approved plans shall be available on the project site at all times.

DGS GENERAL SERVICES
Department of General Services
Architecture & Engineering Sections
State of California
Real Estate Services Division
Project Management & Development Branch
707 Third Street, Suite 4-105
West Sacramento, California 95605

GEOCON CONSULTANTS, INC.
3160 GOLD VALLEY DR - SUITE 800 - RANCHO CORDOVA, CA 95742
PHONE 916.852.9118

Issue

No.	Date	Description
1	6/9/20	50% PROGRESS SET
2	6/30/20	PROGRESS SET
3	7/16/20	60% ESTIMATOR SET
4	8/31/20	95% PROGRESS SET
5	9/25/20	98% REGULATORY REVIEW

Project
STAFF RESIDENCES REHABILITATION
26501 AVENUE 140
PORTERVILLE, CA 93257

DEVELOPMENTAL SERVICES

Supervisor	Designed	Drawn
DSA App No. -	SFM Permit No.	

Sheet Title
VICINITY MAP AND FLOOR/ ROOF PLANS

Project Number
000000000006803

Reference North | Sheet Scale

Sheet Number
HM001

Copyright © 2020, California Department of General Services - Real Estate Services Division

CAD File: R:\Geocon\S1544-03-38\SITE0920.dwg Plot Date: Sep 21, 2020 - 3:43pm Plotted by: awoltrich

RELATIVE BORDER SCALE IN INCHES 0 1 2 3

ISSUE DATE: OCTOBER 28, 2026

ARCHITECTURAL ABBREVIATIONS

℄	CENTERLINE
⌀	DIAMETER OR ROUND
#	NUMBER
AC	ASPHALT CONCRETE
ACC	ACCESSORY
ACM	ASBESTOS CONTAINING MATERIAL
AFF	ABOVE FINISH FLOOR
AHU	AIR HANDLING UNIT
ALNM	ALUMINUM
AR	ACCESSIBLE ROUTE
ARCH	ARCHITECTURAL
ASB	ASBESTOS
AVG	AVERAGE
BD	BOARD
BLDG	BUILDING
BO	BOTTOM OF
BOT	BOTTOM
C	DEGREE CELCIUS
CATV	CABLE TELEVISION
CCTV	CLOSED-CIRCUIT TELEVISION
CF	CUBIC FEET
CFOI	CONTRACTOR FURNISHED OWNER INSTALLED
CJ	CONTROL JOINT
CI	CAST IRON
CLR	CLEAR
CLG	CEILING
CMU	CONCRETE MASONRY UNIT
COL	COLUMN
COMM	COMMUNICATION
COMP	COMPOSITION
CONC	CONCRETE
CONF	CONFERENCE
CONT	CONTINUATION OR CONTINUOUS
CORR	CORRIDOR
DBL	DOUBLE
DEPT	DEPARTMENT
DEMO	DEMOLITION
DF	DRINKING FOUNTAIN
DIA	DIAMETER
DIM	DIMENSION
DISP	DISPENSER
DN	DOWN
DR	DOOR
DS	DOWNSPOUT
DW	DISH WASHER
DWG	DRAWING
E	EAST
(E)	EXISTING
EA	EACH
EJ	EXPANSION JOINT
EL	ELEVATION
ELEC	ELECTRICAL
ELEV	ELEVATOR
EMER	EMERGENCY
EQ	EQUAL
EXP	EXPANSION
EXT	EXTERIOR
FA	FIRE ALARM
FAAP	FIRE ALARM ANNUNCIATOR PANEL
FACP	FIRE ALARM CONTROL PANEL
FD	FLOOR DRAIN
FE	FIRE EXTINGUISHER
FEC	FIRE EXTINGUISHER CABINET
FF	FINISH FLOOR
FG	FINISH GRADE
FLR	FLOOR
FLS	FIRE LIFE SAFETY
FO	FACE OF
FOF	FACE OF FINISH
FOS	FACE OF STUD
FRP	FIBERGLASS REINFORCED PLASTIC
FRZR	FREEZER
FS	FIRE SUPPRESSION
FT	FOOT OR FEET
FTG	FOOTING
FV	FIELD VERIFY
GA	GAUGE
GAL	GALLON
GALV	GALVANIZED
GB	GRAB BAR
GI	GALVANIZED IRON
GL	GLASS
GSM	GALVANIZED SHEET METAL
GSP	GALVANIZED STEEL PIPE
GYP	GYPSUM
GYPBD	GYPSUM BOARD
HB	HOSE BIBB
HC	HOLLOW CORE
HM	HOLLOW METAL
HORIZ	HORIZONTAL
HT	HEIGHT
HVAC	HEATING, VENTILATION, AND AIR CONDITIONING
ID	INSIDE DIAMETER
IN	INCH
INSUL	INSULATION
INT	INTERIOR
JB	JUNCTION BOX
JAN	JANITOR
JT	JOINT
KIT	KITCHEN
L	LENGTH
LAB	LABORATORY
LTG	LIGHTING

M	METER
MAX	MAXIMUM
MC	MEDICINE CABINET
MECH	MECHANICAL
MEMB	MEMBRANE
MFR	MANUFACTURER
MIN	MINIMUM
MISC	MISCELLANEOUS
MM	MILLIMETER
MTD	MOUNTED
MTL	METAL
MUL	MULLION
N	NORTH
(N)	NEW
NIC	NOT IN CONTRACT
NOM	NOMINAL
NTS	NOT TO SCALE
OC	ON CENTER
OD	OUTSIDE DIAMETER
OFCI	OWNER FURNISHED CONTRACTOR INSTALLED
OFOI	OWNER FURNISHED OWNER INSTALLED
OFF	OFFICE
OH	OPPOSITE HAND
OPP	OPPOSITE
O/	OVER
PL	PROPERTY LINE OR PLATE
PL	PLANTER
PLAM	PLASTIC LAMINATE
PLAS	PLASTER
PLWD	PLYWOOD
POT	PATH OF TRAVEL
PR	PAIR
PSI	POUNDS PER SQUARE INCH
PT	PRESSURE TREATED
PTD	PAPER TOWEL DISPENSER
PVC	POLYVINYL CHLORIDE
QT	QUARRY TILE
R	RADIUS
RCPT	RECEPTION
RD	ROOF DRAIN
REF	REFERENCE
REFR	REFRIGERATOR
REINF	REINFORCED
REQ'D	REQUIRED
RM	ROOM
RO	ROUGH OPENING
RR	RESTROOM
RWD	REDWOOD
RWL	RAIN WATER LEADER
S	SOUTH
SAWPM	SELF-ADHERING WATERPROOF MEMBRANE
SCD	SEAT COVER DISPENSER
SCHED	SCHEDULE
SD	SOAP DISPENSER
SDST	SELF DRILLING SELF TAPPING
SF	SQUARE FEET, SQUARE FOOT
SIM	SIMILAR
SMS	SHEET METAL SCREW
SND	SANITARY NAPKIN DISPENSER
SNR	SANITARY NAPKIN RECEPTACLE
SQ	SQUARE
SSC	SOLID SURFACE COUNTERTOP
SS	SERVICE SINK
SST	STAINLESS STEEL
STL	STEEL
STD	STANDARD
STOR	STORAGE
STRUCT	STRUCTURAL
SUPPL	SUPPLEMENTAL
T	TREAD
T&B	TOP AND BOTTOM
T&G	TONGUE AND GROOVE
TB	TOWEL BAR
TEL	TELEPHONE
TEMP	TEMPORARY
TER	TERRAZZO
TERM	TERMINATION
THK	THICK
TJ	TOOLED JOINT
TO	TOP OF
TPD	TOILET PAPER DISPENSER
TV	TELEVISION
TYP	TYPICAL
UON	UNLESS OTHERWISE NOTED
UR	URINAL
VCT	VINYL COMPOSITION TILE
VERT	VERTICAL
VEST	VESTIBULE
VIF	VERIFY IN FIELD
W	WEST
W/	WITH
W/O	WITHOUT
WC	WATER CLOSET
WCHR	WHEELCHAIR
WD	WOOD
WH	WATER HEATER
WP	WATER PROOF
WR	WATER RESISTANT
WT	WEIGHT
WWF	WELDED WIRE FABRIC
YD	YARD

NOTE: ADDITIONAL AND OR VARIED ABBREVIATIONS MAY BE FOUND IN OTHER DISCIPLINES. IF THERE IS A CONFLICT, ABBREVIATIONS IDENTIFIED IN OTHER DISCIPLINES DICTATE WHITHIN THE APPLICABLE DISCIPLINE DRAWINGS.

ARCHITECTURAL MATERIALS

- EARTH
- POROUS FILL
- CONCRETE
- BRICK
- CONCRETE BLOCK
- METAL
- CONTINUOUS WOOD
- SHIM OR NON-CONT. WOOD BLKING
- FINISH WOOD
- PLYWOOD
- GYPSUM WALLBOARD
- STONE
- RIGID INSULATION
- BATT INSULATION
- ACOUSTIC TILE
- PLASTER ON METAL LATH
- TILE
- SEALANT W/ BACK-UP MATERIAL

ARCHITECTURAL SYMBOLS

CENTERLINE

BREAK LINE

MATCH LINE

ELEVATION MARK OR DATUM POINT — T.O.PARAPET 24'-0"

WALL TYPE (SEE A611) — 1S4A

REVISION CLOUD (EXTENT OF REVISION)

REVISION IDENTIFIER — 1

GRID LINE — D

NORTH ARROW

ROOM NAME AND NUMBER — OFFICE 100

DOOR NUMBER — 100

WINDOW TYPE — 1t

KEYNOTE REFERENCE — 0907

EXTERIOR ELEVATION REFERENCE — EAST, 1 AA21

SECTION REFERENCE — 12 / A5.1 (SECTION NUMBER / SHEET NUMBER)

DETAIL REFERENCE — 12 / A5.1

INTERIOR ELEVATION REFERENCE — 1 / 4 A221 2 / 3 (ELEVATION NUMBER, SHEET NUMBER)

ALIGN SURFACES

SIGNAGE REFERENCE — 01-01

GENERAL NOTES

1. THESE GENERAL NOTES APPLY TO THE ARCHITECTURAL DRAWINGS AND SHALL GOVERN UNLESS NOTED OTHERWISE BY GENERAL NOTES OR KEYNOTES ON SPECIFIC SHEETS.
2. DO NOT SCALE DRAWINGS. IF DIMENSION IS NOT PROVIDED, CONSULT STATE FOR DIRECTION.
3. ALL ELEMENTS SHALL BE CONSTRUCTED IN CONFORMANCE WITH THE AMERICANS DISABILITIES ACT (ADA), 2010 ADA STANDARDS FOR ACCESSIBLE DESIGN (ADAS), AND THE 2022 CALIFORNIA BUILDING CODE, CHAPTER 11B. WHERE THESE REGULATIONS CONFLICT, ADHERENCE TO THE PROVISION THAT PROVIDES THE HIGHEST DEGREE OF ACCESS IS REQUIRED.
4. ALL DIMENSIONS ARE TO FACE OF FINISH UNLESS OTHERWISE NOTED.

THE SCOPE OF WORK INVOLVED IN THIS PROJECT IS EXEMPT FROM THE DIVISION OF THE STATE ARCHITECT ACCESSIBILITY REQUIREMENTS IN ACCORDANCE WITH TITLE 24, CALIFORNIA CODE OF REGULATIONS, 2016 CALIFORNIA BUILDING CODE.

OFFICE OF THE STATE FIRE MARSHAL
APPROVED FIRE AND PANIC ONLY
CALIFORNIA DEPARTMENT OF FORESTRY & FIRE PROTECTION
FIRE
01/21/26
25-3084
SINCE 1885
Approval of this plan does not authorize or approve any omission or deviation from applicable regulations. Final approval is subject to field inspection. One set of approved plans shall be available on the project site at all times.

DGS GENERAL SERVICES
Department of General Services
Architecture & Engineering Sections
State of California
Real Estate Services Division
Project Management & Development Branch
707 Third Street, Suite 4-105
West Sacramento, California 95605

LICENSED ARCHITECT
DAVID M. SOLOMON
C-22706
REN. 09/30/23
STATE OF CALIFORNIA

Issue

No.	Date	Description
1	05/30/25	

Project
STAFF RESIDENCES REHABILITATION
26501 AVENUE 140
PORTERVILLE, TULARE COUNTY
CA 93257
DEVELOPMENTAL SERVICES

Supervisor	Designed	Drawn
D.S.	E.K.	E.K.

DSA App No. N/A
SFM Permit No. 25-S-3084-C-NW

Sheet Title
ARCHITECTURAL COVER SHEET

Project Number
000000000006803

Sheet Scale

Sheet Number
AA01

Copyright © 2021, California Department of General Services- Real Estate Services Division

ISSUE DATE: OCTOBER 28, 2026

RELATIVE BORDER SCALE IN INCHES 0 1 2 3

9/9/2025 10:13:48 AM X:\Projects\00xxxx\006803\RVT\ARC\006803_ARC_CENTRAL_TEST_BLDG 104.rvt



2 (E) CONDITION — NOT TO SCALE



3 (E) CONDITION — NOT TO SCALE



4 (E) CONDITION — NOT TO SCALE



5 (E) CONDITION — NOT TO SCALE



6 (E) CONDITION — NOT TO SCALE



7 (E) CONDITION — NOT TO SCALE



8 (E) CONDITION — NOT TO SCALE



9 (E) CONDITION — NOT TO SCALE

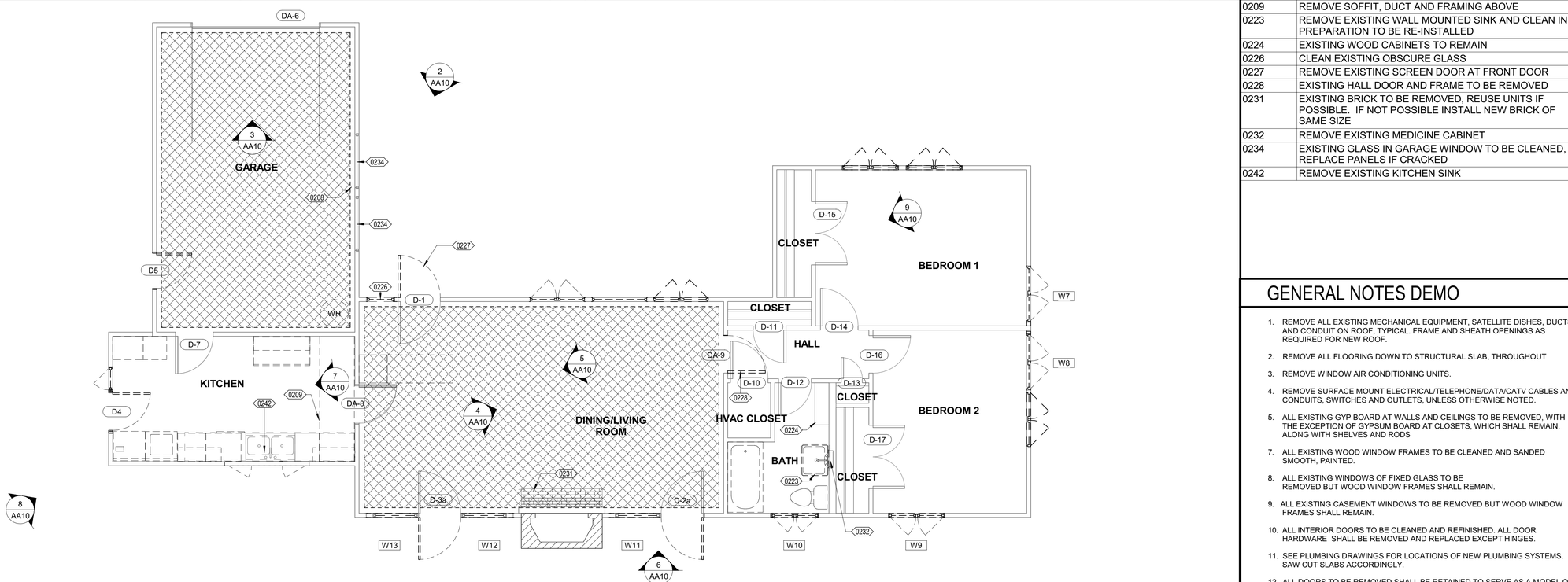

1 2 BEDROOM - DEMO FLOOR PLAN — 1/4" = 1'-0"

LEGEND

- EXISTING SINGLE DOOR AND TRIM TO BE REMOVED, TYP.
- REMOVE EXISTING FIXED GLAZING. WOOD WINDOW FRAME TO REMAIN
- REMOVE EXISTING CASEMENT WINDOW, TYP. WOOD WINDOW FRAME TO REMAIN
- (E) DOOR TO REMAIN AND BE REPAIRED, TYP. SEE DOOR SCHEDULE
- (E) GARAGE DOOR TO REMAIN AND BE REPAIRED, TYP.
- REMOVE (E) UPPER AND LOWER CASEWORK AND COUNTER TOP AND BACKSPLASH
- WH — REMOVE (E) WATER HEATER
- (E) BATHTUB TO BE REMOVED AND CLEAN IN PREPARATION TO BE RE-INSTALLED
- REMOVE (E) TOILET
- (E) SINK TO BE REMOVED AND CLEAN IN PREPARATION TO BE RE-INSTALLED
- REMOVE (E) CASEWORK
- REMOVE (E) CONCRETE SLAB, REPLACE WITH CONCRETE SLAB

KEYNOTE LEGEND - DEMOLITION FLOOR PLAN

Key Value	Keynote Text
0208	REMOVE EXISTING SLAB PER STRUCTURAL DRAWINGS
0209	REMOVE SOFFIT, DUCT AND FRAMING ABOVE
0223	REMOVE EXISTING WALL MOUNTED SINK AND CLEAN IN PREPARATION TO BE RE-INSTALLED
0224	EXISTING WOOD CABINETS TO REMAIN
0226	CLEAN EXISTING OBSCURE GLASS
0227	REMOVE EXISTING SCREEN DOOR AT FRONT DOOR
0228	EXISTING HALL DOOR AND FRAME TO BE REMOVED
0231	EXISTING BRICK TO BE REMOVED, REUSE UNITS IF POSSIBLE. IF NOT POSSIBLE INSTALL NEW BRICK OF SAME SIZE
0232	REMOVE EXISTING MEDICINE CABINET
0234	EXISTING GLASS IN GARAGE WINDOW TO BE CLEANED, REPLACE PANELS IF CRACKED
0242	REMOVE EXISTING KITCHEN SINK

GENERAL NOTES DEMO

1. REMOVE ALL EXISTING MECHANICAL EQUIPMENT, SATELLITE DISHES, DUCTS AND CONDUIT ON ROOF, TYPICAL. FRAME AND SHEATH OPENINGS AS REQUIRED FOR NEW ROOF.
2. REMOVE ALL FLOORING DOWN TO STRUCTURAL SLAB, THROUGHOUT
3. REMOVE WINDOW AIR CONDITIONING UNITS.
4. REMOVE SURFACE MOUNT ELECTRICAL/TELEPHONE/DATA/CATV CABLES AND CONDUITS, SWITCHES AND OUTLETS, UNLESS OTHERWISE NOTED.
5. ALL EXISTING GYP BOARD AT WALLS AND CEILINGS TO BE REMOVED, WITH THE EXCEPTION OF GYPSUM BOARD AT CLOSETS, WHICH SHALL REMAIN, ALONG WITH SHELVES AND RODS
7. ALL EXISTING WOOD WINDOW FRAMES TO BE CLEANED AND SANDED SMOOTH, PAINTED.
8. ALL EXISTING WINDOWS OF FIXED GLASS TO BE REMOVED BUT WOOD WINDOW FRAMES SHALL REMAIN.
9. ALL EXISTING CASEMENT WINDOWS TO BE REMOVED BUT WOOD WINDOW FRAMES SHALL REMAIN.
10. ALL INTERIOR DOORS TO BE CLEANED AND REFINISHED. ALL DOOR HARDWARE SHALL BE REMOVED AND REPLACED EXCEPT HINGES.
11. SEE PLUMBING DRAWINGS FOR LOCATIONS OF NEW PLUMBING SYSTEMS. SAW CUT SLABS ACCORDINGLY.
12. ALL DOORS TO BE REMOVED SHALL BE RETAINED TO SERVE AS A MODEL OF NEW DOORS TO BE REPLACED IN KIND.

THE SCOPE OF WORK INVOLVED IN THIS PROJECT IS EXEMPT FROM THE DIVISION OF THE STATE ARCHITECT ACCESSIBILITY REQUIREMENTS IN ACCORDANCE WITH TITLE 24, CALIFORNIA CODE OF REGULATIONS, 2016 CALIFORNIA BUILDING CODE.

OFFICE OF THE STATE FIRE MARSHAL
APPROVED FIRE AND PANIC ONLY
01/21/26
25-3084
Approval of this plan does not authorize or approve any omission or deviation from applicable regulations. Final approval is subject to field inspection. One set of approved plans shall be available on the project site at all times.

DGS GENERAL SERVICES
Department of General Services
Architecture & Engineering Sections
State of California
Real Estate Services Division
Project Management & Development Branch
707 Third Street, Suite 4-105
West Sacramento, California 95605

LICENSED ARCHITECT
DAVID M. SOLOMON
C-22705
REN. 09/30/23
STATE OF CALIFORNIA

Issue No.	Date	Description
1	05/30/25	

Project
STAFF RESIDENCES REHABILITATION
26501 AVENUE 140
PORTERVILLE, TULARE COUNTY
CA 93257
DEVELOPMENTAL SERVICES

Supervisor	Designed	Drawn
D.S.	E. K.	E. K.

DSA App No.	SFM Permit No.
N/A	25-S-3084-C-NW

Sheet Title
2 BEDROOM DEMOLITION FLOOR PLAN BLDG 104

Project Number
000000000006803A

Reference North | Sheet Scale | Sheet Number
AA10

Copyright © 2021, California Department of General Services - Real Estate Services Division

ISSUE DATE: OCTOBER 28, 2026

X:\Projects\00xxxx\006803\RVT\ARC\006803_ARC_CENTRAL_TEST_BLDG 104.rvt
9/8/2025 10:13:55 AM

RELATIVE BORDER SCALE IN INCHES

DOOR SCHEDULE

DOOR	LOCATION	SIZE (W x H)	THICK	(N) OR (E)	MATERIAL	NEW HARDWARE	HARDWARE GROUP	REMODEL STATUS
D-1	ENTRY	3'-0" x 6'-8"	1 3/4"	(E)	SOLID WD.	YES	1	G
D-2a	LR EAST	3'-0" x 6'-8"	1 1/4"	(E)	WD+SCREEN	YES	8	B
D-2b	LR EAST	3'-0" x 6'-8"	1 3/8"	(N)	WD+GLASS	YES	2	C
D-3a	LR WEST	3'-0" x 6'-8"	1 1/4"	(E)	WD+SCREEN	YES	8	B
D-3b	LR WEST	3'-0" x 6'-8"	1 3/8"	(N)	WD+GLASS	YES	2	C
D-4	EXT KITCHEN	3'-0" x 6'-8"	1 3/8"	(N)	WD+GLASS	YES	3	D
D-5	SIDE GARAGE	2'-6" x 7'-0"	1 3/4"	(N)	WD+GLASS	YES	4	D
D-6	GARAGE	16'-0" x 7'-0"	-	(E)	METAL	YES	7	E
D-7	KITCH/GAR	2'-6" x 6'-8"	1 3/8"	(E)	SOLID WD.	YES	11	A
D-8	KITCH/DINING	2'-8" x 6'-8"	1 3/8"	(E)	H.C. WD.	NO	NONE	F
D-9	TO HALL							H
D-10	HVAC	2'-8" x 6'-8"	1 3/8"	(E)	H.C. WD.	YES	6	A
D-11	CLOSET	2'-4" x 6'-8"	1 3/8"	(E)	H.C. WD.	YES	6	A
D-12	BATH	2'-4" x 6'-8"	1 3/8"	(E)	H.C. WD.	YES	5	A
D-13	CLOSET	1'-6" x 6'-8"	1 3/8"	(E)	H.C. WD.	YES	6	A
D-14	BEDROOM 1	2'-4" x 6'-8"	1 3/8"	(E)	H.C. WD.	YES	5	A
D-15	CLOSET	4'-6" x 6'-8"	1 3/8"	(E)	DBL. H.C. WD.	YES	6	A
D-16	BEDROOM 2	2'-8" x 6'-8"	1 3/8"	(E)	H.C. WD.	YES	5	A
D-17	CLOSET	4'-0" x 6'-0"	1 3/8"	(E)	DBL. H.C. WD.	YES	6	A

A. EXISTING WOOD DOOR TO BE CLEANED, REPAIRED AS REQUIRED AND REFINISHED

B. EXISTING WOOD DOOR TO BE CLEANED, REPAIRED AS REQUIRED AND REFINISHED, REPLACE SCREEN

C. EXISTING WOOD DOOR TO BE CLEANED, REPAIRED AS REQUIRED AND REFINISHED, REPLACE GLASS IF DAMAGED

D. NEW WOOD PANEL DOOR WITH GLASS LIGHT

E. EXISTING METAL OVERHEAD ROLLUP DOOR AND ELECTRIC DOOR OPENER. CLEAN AND TUNE ALL COMPONENTS.

F. WOOD DOOR TO BE CLEANED, REPAIRED AS REQUIRED AND REFINISHED

G. PATCH AND PAINT FRAME AFTER REMOVAL OF SCREEN

H. PATCH AND PAINT FRAME AFTER REMOVAL OF DOOR AND BUTT HINGES.

WINDOW SCHEDULE

WINDOW	LOCATION	SIZE (W x H)	TYPE	REMODEL STATUS	SILL HEIGHT
W-1	ENTRY	2'-0" x 6'-8"	FIXED	1	+ 1'-0" AFF
W-2	LIVING ROOM	4'-0" x 2'-2"	CASEMENT	2	+ 4'-6" AFF
W-3	LIVING ROOM	5'-0" x 2'-2"	FIXED	3	+ 4'-6" AFF
W-4	LIVING ROOM	4'-0" x 4'-2 5/8"	CASEMENT	2	+ 4'-6" AFF
W-5	BEDROOM 1	4'-0" x 4'-2 5/8"	CASEMENT	2	+ 2'-6" AFF
W-6	BEDROOM 1	4'-0" x 4'-2 5/8"	CASEMENT	2	+ 2'-6" AFF
W-7	BEDROOM 1	4'-0" x 4'-2 5/8"	CASEMENT	2	+ 2'-6" AFF
W-8	BEDROOM 2	4'-0" x 4'-2 5/8"	CASEMENT	2	+ 2'-6" AFF
W-9	BEDROOM 2	4'-0" x 4'-2 5/8"	CASEMENT	2	+ 2'-6" AFF
W-10	BATH	4'-0" x 4'-2 5/8"	CASEMENT	2	+ 2'-6" AFF
W-11	LIVING ROOM	4'-0" x 4'-2 5/8"	FIXED	3	+ 1'-0" AFF
W-12	LIVING ROOM	3'-4" x 4'-2 5/8"	FIXED	3	+ 1'-0" AFF
W-13	DINING ROOM	4'-0" x 6'-0"	FIXED	3	+ 1'-0" AFF
W-14	KITCHEN	6'-0" x 3'-2 5/8"	FIX/CASEMENT	2&3	+ 3'-6" AFF
W-15	KITCHEN	1'-8 1/4" x 3'-2 5/8"	FIXED	3	+ 3'-6" AFF
W-16	GARAGE	4'-0" x 2'-2"	FIXED	4	+ 4'-6" AFF
W-17	GARAGE	4'-0" x 2'-2"	FIXED	4	+ 4'-6" AFF

REMODEL STATUS KEY NOTES

1. EXISTING WINDOW TO BE REPAIRED AND REUSED
2. NEW DUAL PANE CASEMENT WINDOWS IN EXISTING WOOD FRAMES
3. NEW DUAL PANE FIXED GLAZING IN EXISTING WOOD FRAMES
4. SINGLE PANE GLASS TO BE CLEANED OR REPLACED IF BROKEN
5. PAINT EXISTING WOOD FRAMES

INTERIOR FINISH SCHEDULE

ROOM	FLOOR FINISH	BASE FINISH	WALL FINISH	CEILING FINISH
LIVING / DINING ROOM	VINYL PLANKS	PAINT (N) WOOD	PAINT (N) GYP. BD.	PAINT (N) GYP. BD.
KITCHEN	VINYL PLANKS	(N) 4" RUBBER BASE	(N) PAINT GYP. BD. / TILE	PAINT (N) GYP. BD.
GARAGE	(N)CONCRETE	NONE	PAINT (N) GYP. BD.	PAINT (N) GYP. BD.
HALL	VINYL PLANKS	PAINT (N) WOOD	PAINT (N) GYP. BD.	PAINT (N) GYP. BD.
HALL CLOSET	VINYL PLANKS	PAINT (E) WOOD	PAINT (E) GYP. BD.	PAINT (E) GYP. BD.
HVAC CLOSET	(E) CONCRETE	PAINT (E) WOOD	PAINT (E) GYP. BD.	PAINT (E) GYP. BD.
BATH	CERAMIC TILE	CERAMIC TILE	(N) PAINT GYP. BD. / TILE	PAINT (E) GYP. BD.
HALL LINEN	VINYL PLANKS	PAINT (E) WOOD	PAINT (E) GYP. BD.	PAINT (E) GYP. BD.
BEDROOM 1	VINYL PLANKS	PAINT (N) WOOD	PAINT (N) GYP. BD.	PAINT (N) GYP. BD.
BR 1 CLOSET	VINYL PLANKS	PAINT (E) WOOD	PAINT (E) GYP. BD.	PAINT (E) GYP. BD.
BEDROOM 2	VINYL PLANKS	PAINT (N) WOOD	PAINT (N) GYP. BD.	PAINT (N) GYP. BD.
BR 2 CLOSET	VINYL PLANKS	PAINT (E) WOOD	PAINT (E) GYP. BD.	PAINT (E) GYP. BD.

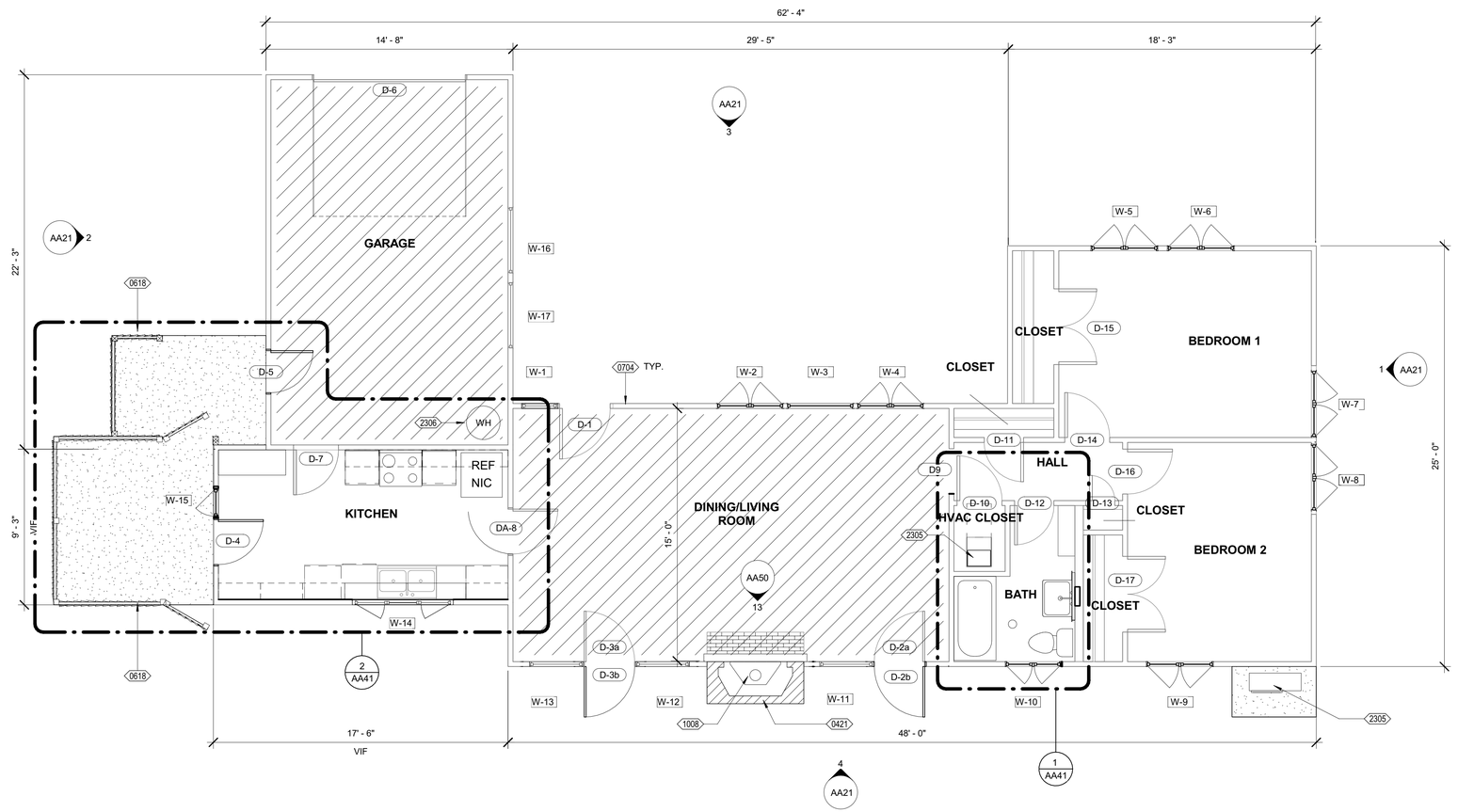

LEGEND

- SINGLE DOOR AND TRIM
- CASEMENT WINDOW
- FIXED WINDOW
- FENCE SEE ENLARGED PLAN ON SHEET AA41
- UPPER AND LOWER CASEWORK, SEE ENLARGED PLAN SHEET AA41
- WH — WATER HEATER
- BATHTUB
- TOILET
- SINK
- FLOORING OVER CONCRETE SLAB

KEYNOTE LEGEND- NEW CONSTRUCTION

Key Value	Keynote Text
0421	EXISTING BRICK CHIMNEY. CLEAN BRICK, REPAIR DAMAGED AREAS AND REPOINT GROUT
0618	WOOD FENCE AROUND KITCHEN PATIO, SEE DETAILS 1/AA51, 4/AA51
0704	R-15 BATT INSULATION
1008	FIREPLACE INSERT UNIT, SEE DETAL 13/AA50
2305	HVAC UNIT, SEE MECHANICAL SHEETS
2306	WATER HEATER UNIT, SEE MECHANICAL SHEETS

GENERAL NOTES

1. ALL INTERIOR WALLS TO RECEIVE 1/2" GYP. BOARD WITH TEXTURE AND PAINT, INCLUDING GARAGE.
2. ALL EXISTING WOOD WINDOW FRAMES TO HAVE HOLES REPAIRED AND TO BE REPAINTED BEFORE NEW GLAZING AND NEW CASEMENT WINDOWS ARE INSTALLED.
3. REFINISH AND REPAINT ALL CLOSETS. DO NOT REMOVE GYPSUM BOARD, SHELVES, ROD IN THE CLOSETS.
4. INSTALL VINYL PLANK FLOORING SYSTEM, SEE FINISH SCHEDULE.

1 2 BEDROOM BLDG 104 - FLOOR PLAN — 1/4" = 1'-0"

THE SCOPE OF WORK INVOLVED IN THIS PROJECT IS EXEMPT FROM THE DIVISION OF THE STATE ARCHITECT ACCESSIBILITY REQUIREMENTS IN ACCORDANCE WITH TITLE 24, CALIFORNIA CODE OF REGULATIONS, 2016 CALIFORNIA BUILDING CODE.

OFFICE OF THE STATE FIRE MARSHAL
APPROVED FIRE AND PANIC ONLY
01/21/26
25-3084
Approval of this plan does not authorize or approve any omission or deviation from applicable regulations. Final approval is subject to field inspection. One set of approved plans shall be available on the project site at all times.

DGS GENERAL SERVICES
Department of General Services
Architecture & Engineering Sections
State of California
Real Estate Services Division
Project Management & Development Branch
707 Third Street, Suite 4-105
West Sacramento, California 95605

LICENSED ARCHITECT
DAVID M. SOLOMON
C-22108
REN. 08/2025
STATE OF CALIFORNIA

Issue No.	Date	Description
1	08/22/25	

Project
STAFF RESIDENCES REHABILITATION
26501 AVENUE 140
PORTERVILLE, TULARE COUNTY
CA 93257
DEVELOPMENTAL SERVICES

Supervisor	Designed	Drawn
D.S.	E. K.	E. K.

DSA App No.	SFM Permit No.
N/A	25-S-3084-C-NW

Sheet Title
2 BEDROOM FLOOR PLAN BLDG 104

Project Number
000000000006803A

Reference North | Sheet Scale | Sheet Number AA11

Copyright © 2021, California Department of General Services- Real Estate Services Division

ISSUE DATE: OCTOBER 28, 2026

X:\Projects\00xxxx\006803\RVT\ARC\006803_ARC_CENTRAL_TEST_BLDG 104.rvt
9/8/2025 10:14:00 AM

RELATIVE BORDER SCALE IN INCHES

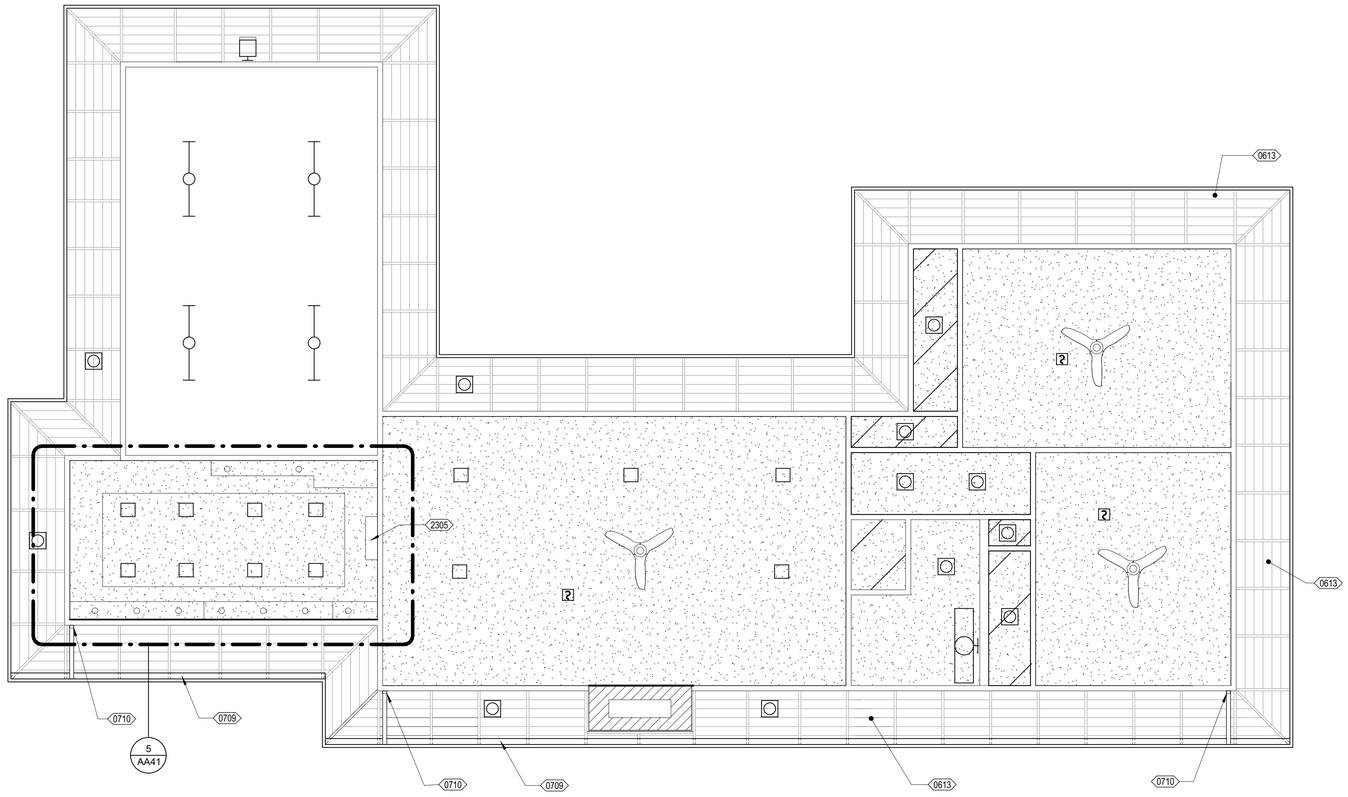

1 2 BEDROOM - REFLECTED CEILING PLAN

1/4" = 1'-0"

REFLECTED CEILING PLAN - LEGEND

- LUMINAIRE, WALL MOUNTED
- STRIP LUMINAIRE, SURFACE OR PENDANT MOUNTED
- ROUND DOWNLIGHT LUMINAIRE, RECESSED IN CEILING
- SQUARE DOWNLIGHT LUMINAIRE, RECESSED IN CEILING
- DOWNLIGHT, SURFACE OR PENDANT MOUNTED
- AREA LUMINAIRE, SURFACE OR RECESSED MOUNTED TO WALL
- CEILING FAN
- SMOKE DETECTOR
- PAINT EXISTING GYPSUM BOARD CEILING
- 1/2" GYPSUM BOARD CEILING
- PAINT UNDERSIDE OF ROOF DECK

KEYNOTE LEGEND - REFLECTED CEILING PLAN

Key Value	Keynote Text
0613	EXISTING SHIP LAP AND 2x6 OUTRIGGERS PER DETAIL 5/A500, REPAIR AND REPAINT
0709	CONCEALED GUTTER
0710	2"x3" RECTANGULAR SM DOWNSPOUT. TERMINATE AT SPLASH BLOCK, DETAIL 10/AA51
2305	HVAC UNIT, SEE MECHANICAL SHEETS

ALLOWANCES

1. CONTRACTOR TO PROVIDE THE FOLLOWING ALLOWANCES FOR DAMAGED OR ROTTEN WOOD ELEMENTS FOUND IN THE STRUCTURE:
   A) REPLACEMENT OF 200 L.F. OF THE 2 x 8 WOOD FASCIA AT THE BUILDING EAVES.
   B) REPLACEMENT OF 120 S.F. (3' x 40') OF THE EXPOSED 1 x 4 SHIP LAP PLANKS AT THE UNDERSIDE OF THE EAVES
   C) REPLACEMENT OF 320 S.F. (10 - 4 x 8 SHEETS) OF THE 1" PLYWOOD ROOF SHEATHING
   D) THE CONTRACTOR WILL WALK THE PROJECT WITH THE ARCHITECT AND INSPECTOR TO DETERMINE THE LOCATIONS FOR THESE REPLACEMENT ELEMENTS.

GENERAL NOTES

1. INSTALL (N) GYP. BOARD CEILING EXCEPT CLOSETS AND GARAGE.

THE SCOPE OF WORK INVOLVED IN THIS PROJECT IS EXEMPT FROM THE DIVISION OF THE STATE ARCHITECT ACCESSIBILITY REQUIREMENTS IN ACCORDANCE WITH TITLE 24, CALIFORNIA CODE OF REGULATIONS, 2016 CALIFORNIA BUILDING CODE.

OFFICE OF THE STATE FIRE MARSHAL
APPROVED FIRE AND PANIC ONLY
01/21/26
25-3084
Approval of this plan does not authorize or approve any omission or deviation from applicable regulations. Final approval is subject to field inspection. One set of approved plans shall be available on the project site at all times.

GENERAL SERVICES
Department of General Services
Architecture & Engineering Sections
State of California
Real Estate Services Division
Project Management & Development Branch
707 Third Street, Suite 4-105
West Sacramento, California 95605

LICENSED ARCHITECT
DAVID M. SOLOMON
C-22708
REN. 09/30/23
STATE OF CALIFORNIA

Issue No.	Date	Description
1	08/22/25	

Project
STAFF RESIDENCES REHABILITATION

26501 AVENUE 140
PORTERVILLE, TULARE COUNTY
CA 93257

DEVELOPMENTAL SERVICES

Supervisor	Designed	Drawn
D.S.	E. K.	E. K.

DSA App No.	SFM Permit No.
N/A	25-S-3084-C-NW

Sheet Title
2 BED. REFLECTED CEILING PLAN BLDG 104

Project Number
000000000006803A

Reference North

Sheet Scale

Sheet Number
AA12

Copyright © 2021, California Department of General Services- Real Estate Services Division

ISSUE DATE: OCTOBER 28, 2026

RELATIVE BORDER SCALE IN INCHES 0 1 2 3

X:\Projects\00xxxx\006803\RVT\ARC\006803_ARC_CENTRAL_TEST_BLDG 104.rvt
9/8/2025 10:14:05 AM

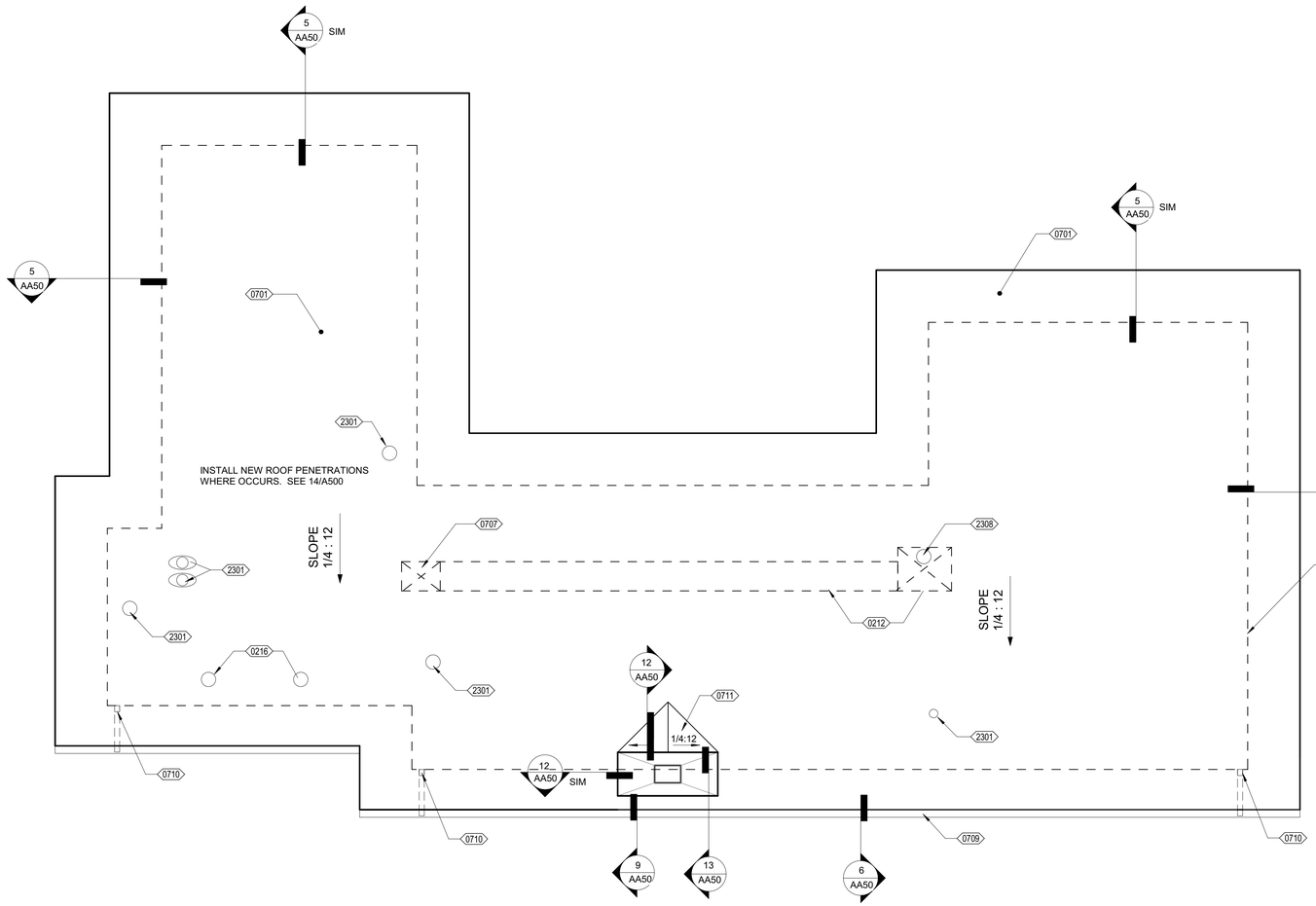

KEYNOTE LEGEND - ROOF

Key Value	Keynote Text
0212	REMOVE EXISTING MECHANICAL UNIT AND DUCT WORK; REMOVE ELECTRICAL WIRING
0216	ELECTRICAL WEATHER HEADS TO BE REMOVED
0701	PVC SINGLE PLY ROOFING SYSTEM, DETAIL 7/AA50
0706	EXISTING WALL BELOW
0707	EXISTING ROOF PENETRATIONS TO BE INFILLED, DETAIL 7/AA50 SIM.
0709	CONCEALED GUTTER
0710	2"x3" RECTANGULAR SM DOWNSPOUT. TERMINATE AT SPLASH BLOCK, DETAIL 10/AA51
0711	CRICKET
2301	VENT THROUGH ROOF PER DETAIL 14/AA50
2308	EXISTING OUTSIDE AIR INTAKE TO REMAIN

GENERAL NOTES

1. REMOVE AND DISCARD ALL EXISTING ROOFING SYSTEM, DOWN TO THE STRUCTURAL DECK. INSPECT EXISTING ROOF DECK AND NOTIFY STATE OF ANY DAMAGE OR DRY ROT.
2. SAVE AND PROTECT ALL PERIMETER WOOD NAILERS. CONDUCT REVIEW OF EXISTING NAILERS WITH STATE INSPECTOR & REPLACE ALL WOOD NOT ACCEPTABLE TO REMAIN FROM ALLOWANCE SET IN PROJECT MANUAL. ALL NEW WOOD SHALL BE TREATED FOR ROT RESISTANCE.
3. CONTRACTOR SHALL INSTALL A NEW PVC SINGLE PLY ROOF SYSTEM, WITH RIGID INSULATION. VERIFY ROOF DECK CONDITIONS AFTER DEMOLITION AND CONDUCT A JOB-SITE MEETING WITH THE STATE REPRESENTATIVE TO REVIEW AND CONFIRM ALL CONDITIONS ARE READY FOR NEW ROOFING SYSTEM. CLEAN STRUCTURAL DECK AND BRICK CHIMNEY AND APPLY PRIMER TO DECK AND CHIMNEY SURFACES
4. INSTALL VAPOR RETARDER PER MANUFACTURE REQUIREMENTS
5. INSTALL ONE LAYER OF 1-1/2" RIGID INSULATION OVER STRUCTURAL DECK. VERIFY ROOF SLOPE IS MINIMUM 1/4" PER FOOT, INCLUDING CRICKETS.
6. PAINT ALL NEW FLASHING AND METAL TRIM TO MATCH EXISTING METAL TRIM OR FLASHING AT SIMILAR LOCATIONS.

1 2 BEDROOM - ROOF PLAN — 1/4" = 1'-0"

THE SCOPE OF WORK INVOLVED IN THIS PROJECT IS EXEMPT FROM THE DIVISION OF THE STATE ARCHITECT ACCESSIBILITY REQUIREMENTS IN ACCORDANCE WITH TITLE 24, CALIFORNIA CODE OF REGULATIONS, 2016 CALIFORNIA BUILDING CODE.

OFFICE OF THE STATE FIRE MARSHAL
APPROVED FIRE AND PANIC ONLY
01/21/26
25-3084
Approval of this plan does not authorize or approve any omission or deviation from applicable regulations. Final approval is subject to field inspection. One set of approved plans shall be available on the project site at all times.

GENERAL SERVICES
Department of General Services
Architecture & Engineering Sections
State of California
Real Estate Services Division
Project Management & Development Branch
707 Third Street, Suite 4-105
West Sacramento, California 95605

LICENSED ARCHITECT
DAVID M. SOLOMON
C-22708
REN. 08/2025
STATE OF CALIFORNIA

Issue

No.	Date	Description
1	08/22/25	

Project
STAFF RESIDENCES REHABILITATION
26501 AVENUE 140
PORTERVILLE, TULARE COUNTY
CA 93257

DEVELOPMENTAL SERVICES

Supervisor	Designed	Drawn
D.S.	E. K.	E. K.

DSA App No.	SFM Permit No.
N/A	25-S-3084-C-NW

Sheet Title
2 BEDROOM ROOF PLAN BLDG 104

Project Number
000000000006803A

Reference North | Sheet Scale

Sheet Number
AA13

Copyright © 2021, California Department of General Services - Real Estate Services Division

ISSUE DATE: OCTOBER 28, 2026

RELATIVE BORDER SCALE IN INCHES 0 1 2

X:\Projects\00xxxx\006803\RVT\ARC\006803_ARC_CENTRAL_TEST_BLDG 104.rvt
9/8/2025 10:14:10 AM

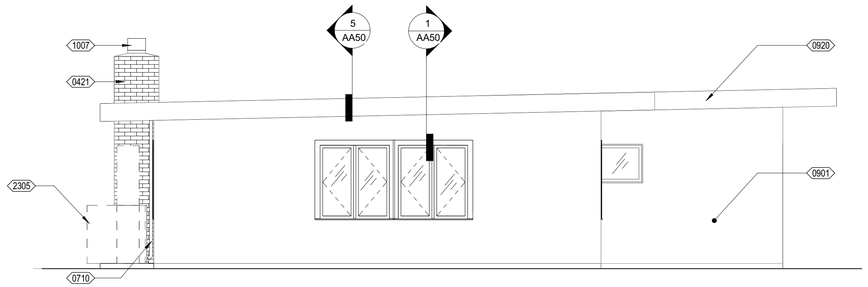

1 2 BEDROOM - EAST ELEVATION — 1/4" = 1'-0"

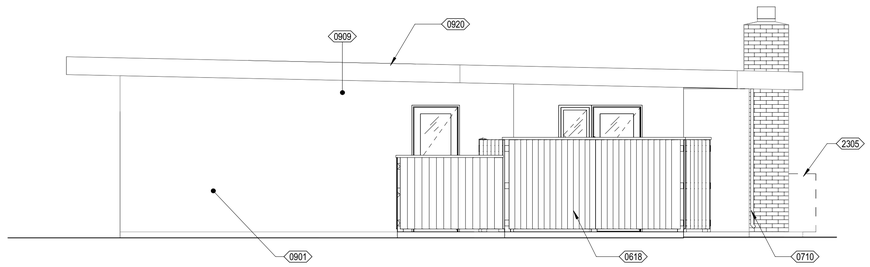

2 2 BEDROOM - WEST ELEVATION — 1/4" = 1'-0"

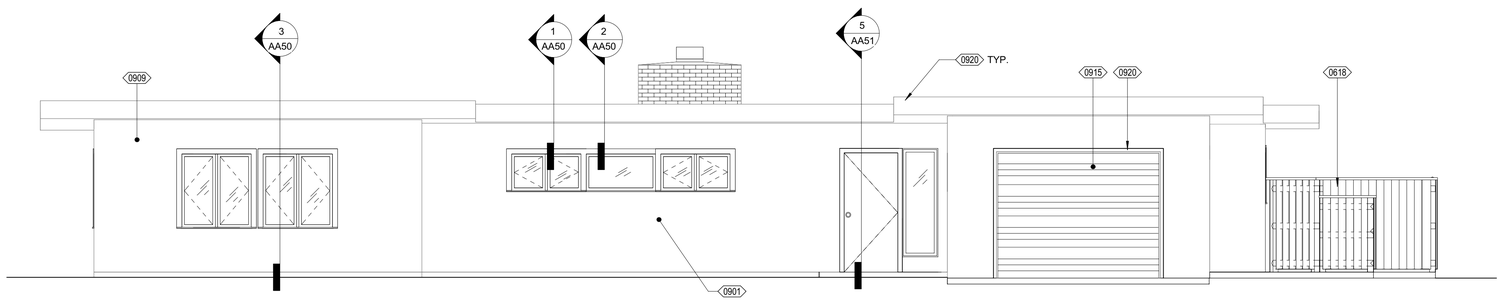

3 2 BEDROOM - NORTH ELEVATION — 1/4" = 1'-0"

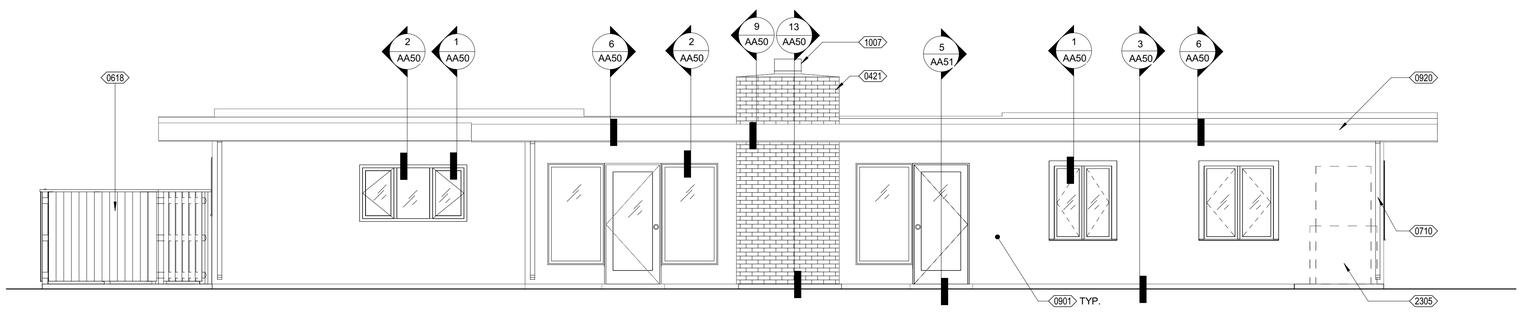

4 2 BEDROOM - SOUTH ELEVATION — 1/4" = 1'-0"

KEYNOTE LEGEND - EXTERIOR ELEVATIONS	
Key Value	Keynote Text
0421	EXISTING BRICK CHIMNEY. CLEAN BRICK, REPAIR DAMAGED AREAS AND REPOINT GROUT
0618	WOOD FENCE AROUND KITCHEN PATIO, SEE DETAILS 1/AA51, 4/AA51
0710	2"x3" RECTANGULAR SM DOWNSPOUT. TERMINATE AT SPLASH BLOCK, DETAIL 10/AA51
0901	CEMENT PLASTER REPAIRED AS PER 3/AA50
0909	EXTERIOR PAINT TO MATCH EXISTING PLASTER COLOR
0915	CLEAN, PAINT AND TUNE GARAGE DOOR FOR SMOOTH OPERATION
0920	PAINT FASCIA AND TRIM, TYP.
1007	HIGH WIND FLUE-CAP
2305	HVAC UNIT, SEE MECHANICAL SHEETS

GENERAL NOTES

1. ALL NEW WINDOWS TO BE FITTED / INSTALLED WITHIN EXISTING WOOD FRAMES.

2. CEMENT PLASTER: REPAIR EXISTING CEMENT PLASTER. TEST EXISTING CEMENT PLASTER AND MATCH PROPERTIES. SEAL HAIRLINE CRACKS WITH THIN SLURRY COAT AND PAINT. REMOVE ALL DETERIORATED, SEVERELY CRACKED AND LOOSE CEMENT PLASTER DOWN TO THE LATH. REPAIR ANY LATH THAT IS NOT SECURELY ATTACHED TO SUBSTRATE. CLEAN SURFACES AND APPLY A BONDING AGENT FOR NEW CEMENT PLASTER TO MATCH EXISTING FINISH.

3. ALL EXISTING AND REPAIRED CEMENT PLASTER SHALL BE REPAINTED TO MATCH EXISTING COLOR.

THE SCOPE OF WORK INVOLVED IN THIS PROJECT IS EXEMPT FROM THE DIVISION OF THE STATE ARCHITECT ACCESSIBILITY REQUIREMENTS IN ACCORDANCE WITH TITLE 24, CALIFORNIA CODE OF REGULATIONS, 2016 CALIFORNIA BUILDING CODE.

OFFICE OF THE STATE FIRE MARSHAL
APPROVED FIRE AND PANIC ONLY
01/21/26
25-3084
Approval of this plan does not authorize or approve any omission or deviation from applicable regulations. Final approval is subject to field inspection. One set of approved plans shall be available on the project site at all times.

GENERAL SERVICES
Department of General Services
Architecture & Engineering Sections
State of California
Real Estate Services Division
Project Management & Development Branch
707 Third Street, Suite 4-105
West Sacramento, California 95605

LICENSED ARCHITECT
DAVID M. SOLOMON
C-22706
REN. 08/30/23
STATE OF CALIFORNIA

Issue		
No.	Date	Description
1	08/22/25	

Project
STAFF RESIDENCES REHABILITATION

26501 AVENUE 140
PORTERVILLE, TULARE COUNTY
CA 93257

DEVELOPMENTAL SERVICES

Supervisor	Designed	Drawn
D.S.	E. K.	E. K.
DSA App No.	SFM Permit No.	
N/A	25-S-3084-C-NW	

Sheet Title
2 BED. EXTERIOR ELEVATIONS BLDG 104

Project Number
000000000006803A

Sheet Scale

Sheet Number
AA21

Copyright © 2021, California Department of General Services: Real Estate Services Division

ISSUE DATE: OCTOBER 28, 2026

RELATIVE BORDER SCALE IN INCHES 0 1 2

X:\Projects\00xxxx\006803\RVT\ARC\006803_ARC_CENTRAL_TEST_BLDG 104.rvt
9/8/2025 10:14:18 AM

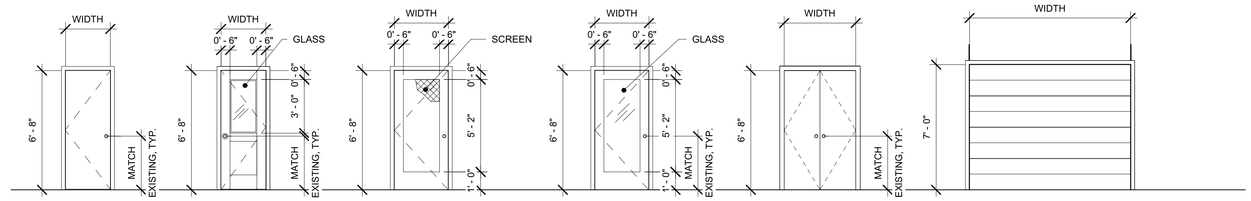

D1, D7, D9, D10, D11, D12, D13, D14, D16

D4, D5
STILE-AND-RAIL DOOR

D2b, D3b

D2a, D3a

D15, D17

D6

1 DOOR TYPES

1/4" = 1'-0"

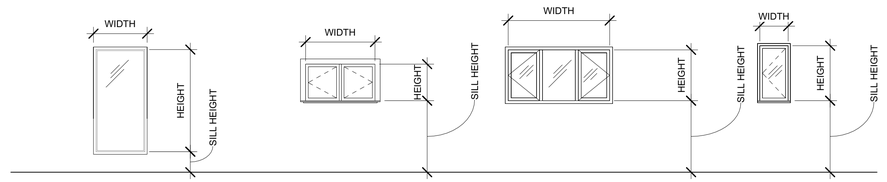

W1, W3, W11, W12, W13, W16, W17

W2, W4, W5, W6, W7, W8, W9, W10,

W14

W15

2 WINDOW TYPES

1/4" = 1'-0"

THE SCOPE OF WORK INVOLVED IN THIS PROJECT IS EXEMPT FROM THE DIVISION OF THE STATE ARCHITECT ACCESSIBILITY REQUIREMENTS IN ACCORDANCE WITH TITLE 24, CALIFORNIA CODE OF REGULATIONS, 2016 CALIFORNIA BUILDING CODE.

OFFICE OF THE STATE FIRE MARSHAL
APPROVED FIRE AND PANIC ONLY

01/21/26
25-3084
PORTERVILLE, TULARE

Approval of this plan does not authorize or approve any omission or deviation from applicable regulations. Final approval is subject to field inspection. One set of approved plans shall be available on the project site at all times.

GENERAL SERVICES

Department of General Services
Architecture & Engineering Sections
State of California
Real Estate Services Division
Project Management & Development Branch

707 Third Street, Suite 4-105
West Sacramento, California 95605

LICENSED ARCHITECT
DAVID M. SOLOMON
C-22708
REN. 08/2025
STATE OF CALIFORNIA

Issue		
No.	Date	Description
1	08/22/25	

Project
STAFF RESIDENCES REHABILITATION

26501 AVENUE 140
PORTERVILLE, TULARE COUNTY
CA 93257

DEVELOPMENTAL SERVICES

Supervisor	Designed	Drawn
D.S.	E.K.	E.K.

DSA App No.	SFM Permit No.
	25-S-3084-C-NW

Sheet Title
DOOR AND WINDOW TYPES SCHEDULE BLDG 104

Project Number
000000000006803

Sheet Scale

Sheet Number
AA31

Copyright © 2021, California Department of General Services- Real Estate Services Division

ISSUE DATE: OCTOBER 28, 2026

RELATIVE BORDER SCALE IN INCHES 0 1 2 3

X:\Projects\000xxx\006803\RVT\ARC\006803_ARC_CENTRAL_TEST_BLDG 104.rvt
9/8/2025 10:14:27 AM

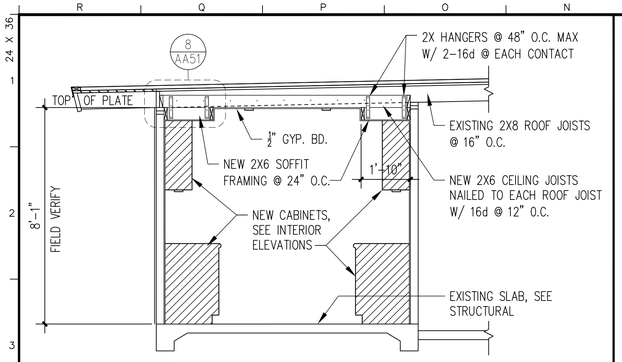

6 SECTION THRU KITCHEN — 3/8"=1'-0"

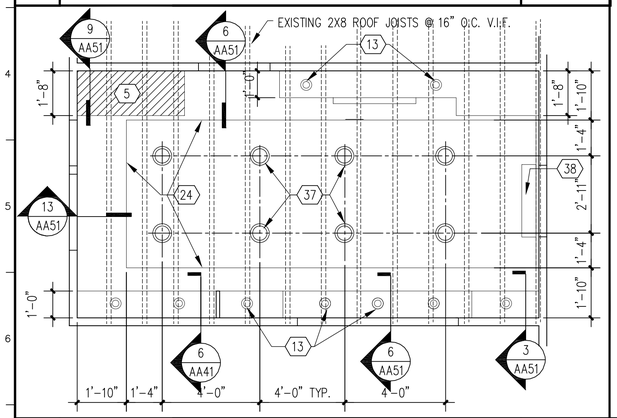

5 KITCHEN - ENLG CEILING PLAN — 3/8"=1'-0"

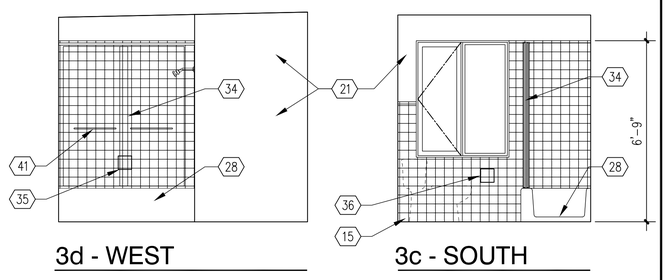

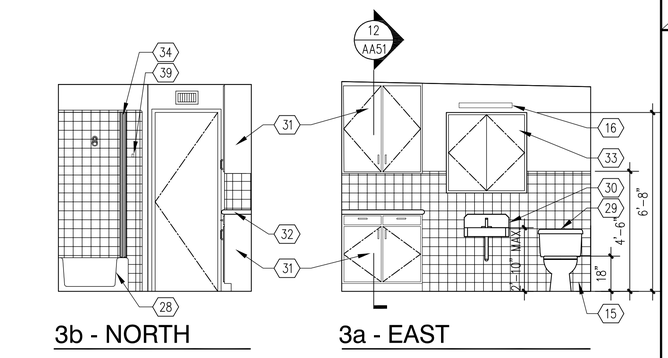

3 BATHROOM - INTERIOR ELEVATIONS — 3/8"=1'-0"

NOT USED

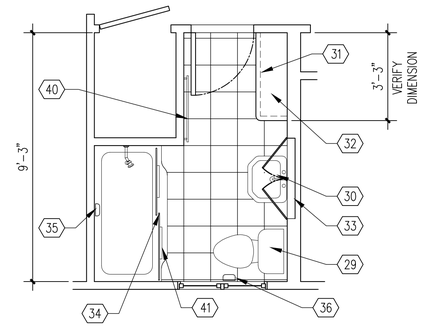

1 BATHROOM - ENLG PLAN — 3/8"=1'-0"

KEY NOTE LEGEND

1. VINYL FLOORING – PLANK STYLE
2. 4" RUBBER BASE, TYP.
3. SOLID SURFACE COUNTERTOP
4. CERAMIC TILE BACK SPLASH, CARRY TO FLOOR BEHIND WASHER & DRYER
5. FULL HEIGHT PANTRY CABINET
6. GAS RANGE TOP AND OVEN
7. COMBINATION RANGE HOOD AND MICROWAVE OVEN, PROVIDE BLOCKING IN WALL FOR SUPPORT.
8. REFRIGERATOR
9. WASHER
10. DRYER
11. DISHWASHER BELOW COUNTER
12. DOUBLE SINK WITH GARBAGE DISPOSAL
13. UNDER-CABINET DOWN LIGHTS, SEE ELECTRICAL
14. CONCRETE SLAB, ¼" PER FT. SLOPE TO DRAIN AWAY FROM BUILDING
15. TILE BASE
16. VANITY LIGHT
17. ALUMINUM THRESHOLD WITH WEATHERSTRIPING DETAIL5/AA51
18. 5'-0" HIGH FENCE, SEE DETAIL 1/AA51
19. 4'-0" HIGH FENCE, SEE DETAIL 1/AA51
20. 5'-3 12/" HIGH X 3'-0" WIDE HIGH FENCE GATE WITH LOCKS. SEE 1&4/AA51
21. ½"GYP BOARD, TEXTURED AND PAINTED, TYP.
22. STAINED HARDWOOD CABINETS AND DOORS
23. TRASH RECEPTACLES, NIC
24. EDGE OF 6" SOFFIT
25. BULLNOSE TILES AT EDGES OF TILE FIELDS
26. EXISTING DOUBLE SWINGING DOOR
27. ADJUSTABLE MELAMINE SHELVING, TYP.
28. EXISTING TUB TO BE REMOVED, REFURBISHED AND REINSTALLED, PROVIDE NEW FITTINGS
29. EXISTING TOILET TO BE REMOVED AND REPLACED
30. EXISTING SINK TO BE REMOVED, REFURBISHED AND REINSTALLED PROVIDE NEW FITTINGS
31. EXISTING WOOD CABINET TO BE REPAIRED AND REPAINTED
32. NEW SOLID SURFACE COUNTERTOP, SEE DETAIL 12/AA51
33. NEW RECESSED 36" X 36" MIRROR/MEDICINE CABINET CENTERED OVER SINK, MODIFY FRAMING TO PROVIDE NEW OPENING IN WALL
34. NEW GLASS SLIDING SHOWER DOORS. PROVIDE BLOCKING IN WALLS FOR SUPPORT AT ENDS OF TOP TRACK
35. CERAMIC SOAP HOLDER
36. CERAMIC TOILET PAPER HOLDER
37. CEILING DOWN LIGHTING, SEE ELECTRICAL DWGS
38. MECHANICAL UNIT, SEE MECH. DWGS
39. ROBE HOOK
40. TOWEL BAR
41. TOWEL BAR/DOOR PULL

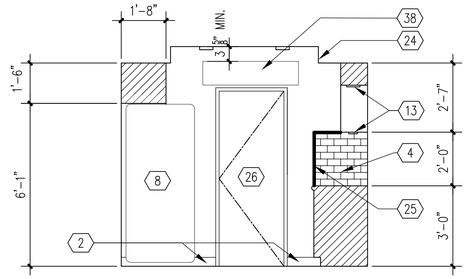

4d - EAST

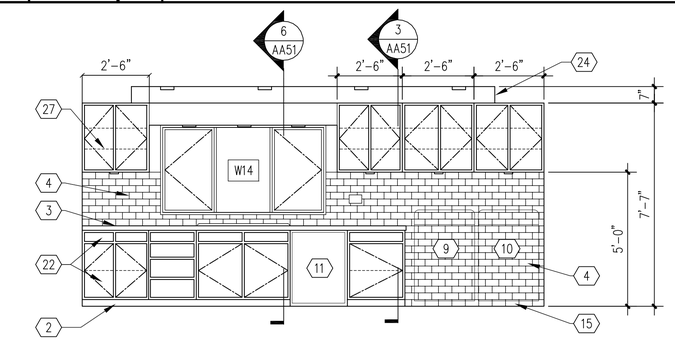

4c - SOUTH

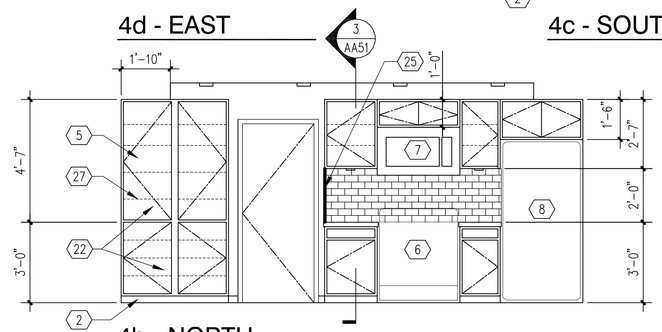

4b - NORTH

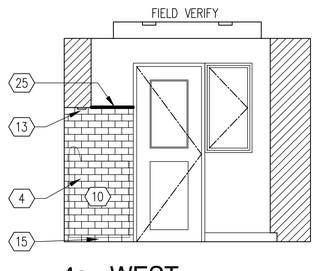

4a - WEST

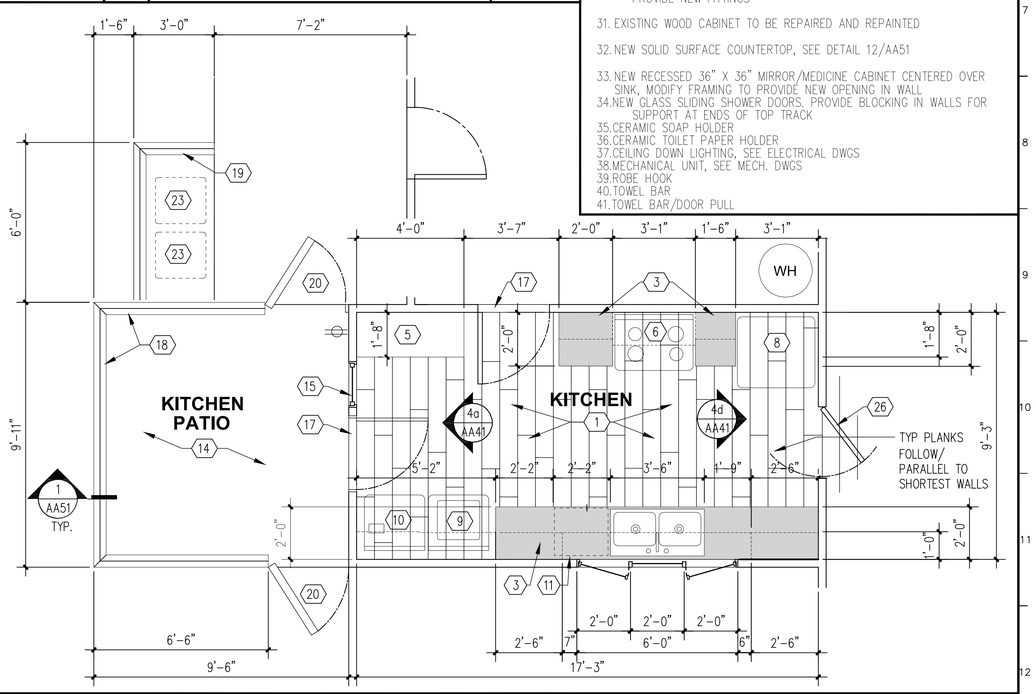

2 KITCHEN - ENLARGED FLOOR PLAN — 3/8"=1'-0"

4 KITCHEN - INTERIOR ELEVATIONS — 3/8"=1'-0"

THE SCOPE OF WORK INVOLVED IN THIS PROJECT IS EXEMPT FROM THE DIVISION OF THE STATE ARCHITECT ACCESSIBILITY REQUIREMENTS IN ACCORDANCE WITH TITLE 24, CALIFORNIA CODE OF REGULATIONS, 2016 CALIFORNIA BUILDING CODE.

OFFICE OF THE STATE FIRE MARSHAL
APPROVED FIRE AND PANIC ONLY

CALIFORNIA DEPARTMENT OF FORESTRY & FIRE PROTECTION
FIRE
CONSULT 1 SBS
01/21/26
25-3084

Approval of this plan does not authorize or approve any omission or deviation from applicable regulations. Final approval is subject to field inspection. One set of approved plans shall be available on the project site at all times.

DGS GENERAL SERVICES
Department of General Services
Architecture & Engineering Sections
State of California
Real Estate Services Division
Project Management & Development Branch
707 Third Street, Suite 4-105
West Sacramento, California 95605

LICENSED ARCHITECT
DAVID M. SOLOMON
C-22108
REN. 08/2025
STATE OF CALIFORNIA

Issue		
No.	Date	Description
1	8/29/25	

Project
STAFF RESIDENCES REHABILITATION

26501 AVENUE 140
PORTERVILLE, CA 93257

DEVELOPMENTAL SERVICES

Supervisor	Designed	Drawn
D. S.	E. K.	E. K.

DSA App No.	SFM Permit No.
N/A	25-S-3084-C-NW

Sheet Title
INTERIOR ELEVATIONS PLANS AND DETAILS BLDG 104

Project Number
000000000006803

Reference North

Sheet Scale
AS NOTED

Sheet Number
AA41
of

Copyright © 2020, California Department of General Services - Real Estate Services Division
V2

ISSUE DATE: OCTOBER 28, 2026

CAD File: X:\Projects\00xxxx\006803\DWG\PLTAA41.dwg Plot Date: Sep 08, 2025 - 10:44am Plotted by: ekeltgen

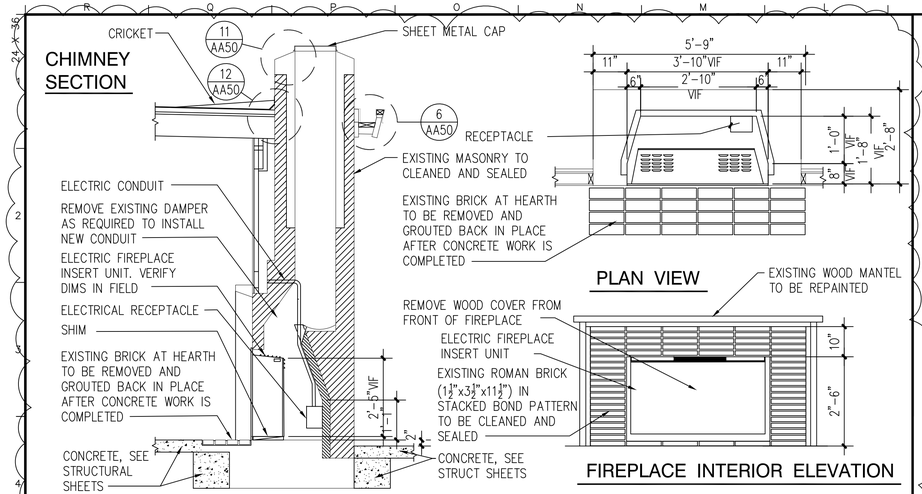

13 FIREPLACE & CHIMNEY DETAILS 1/2" = 1'-0"

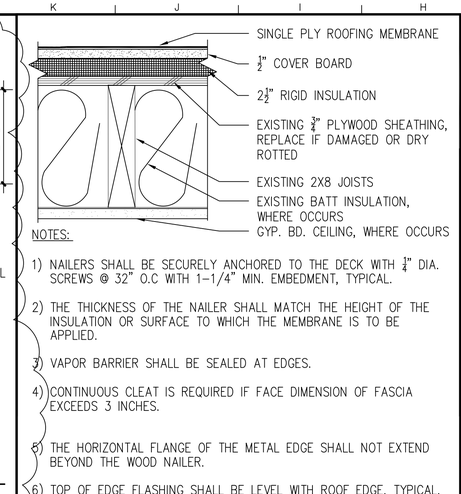

7 SINGLE PLY GENERAL NOTES

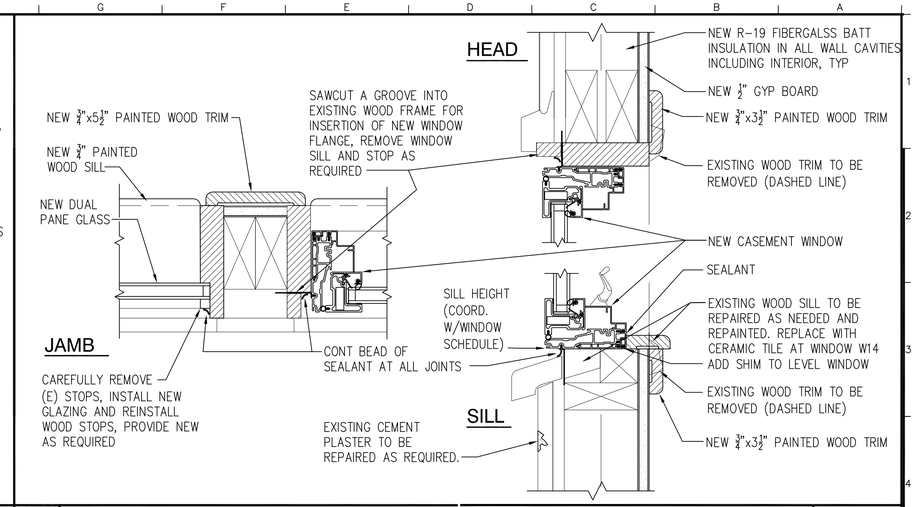

1 CASEMENT WINDOW 3" = 1'-0"

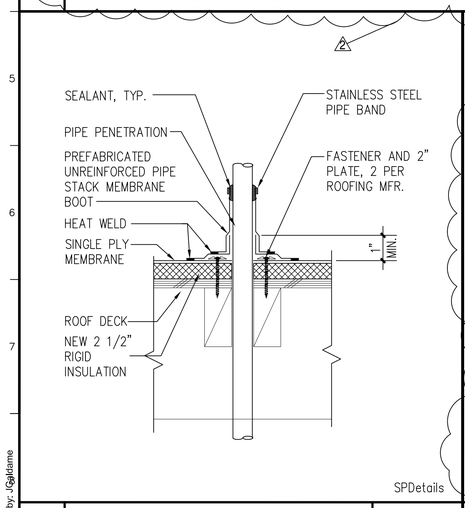

14 ROOF PENETRATION N.T.S.

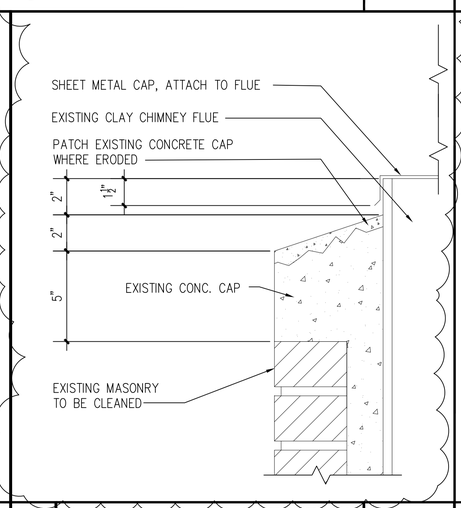

11 TOP OF CHIMNEY 3"=1'-0"

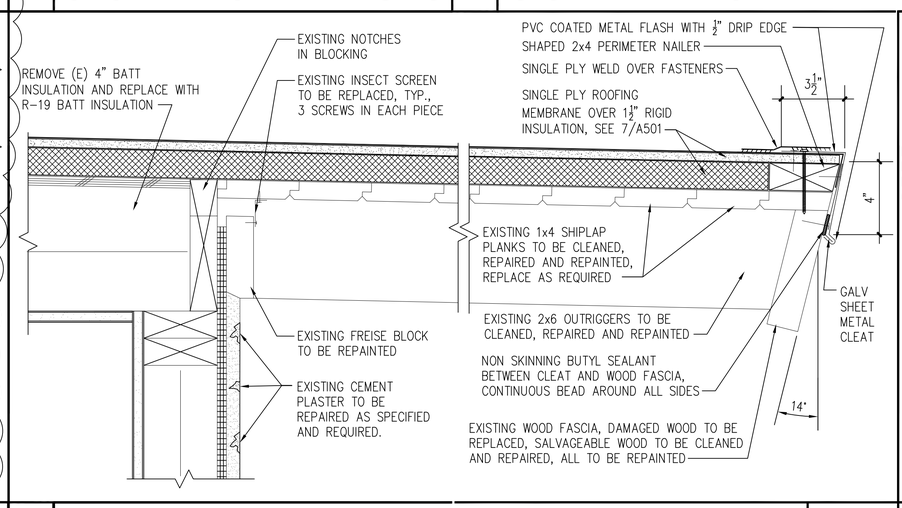

5 ROOF EAVE/FASCIA N.T.S.

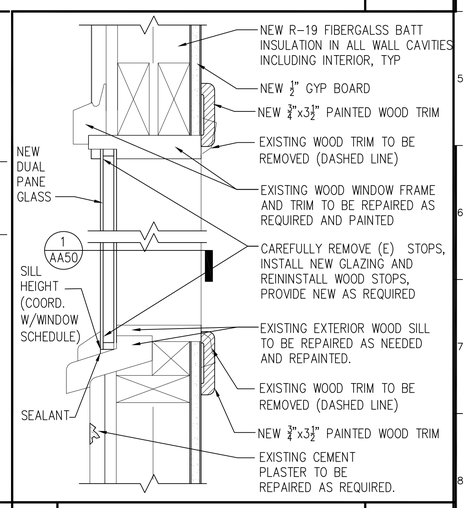

2 FIXED WOOD WINDOW 3" = 1'-0"

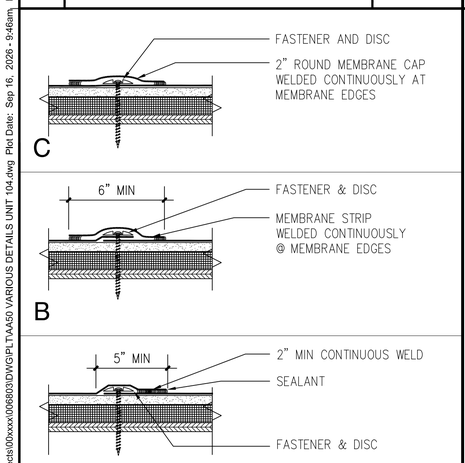

15 SINGLE PLY WELDS 3"=1'-0"

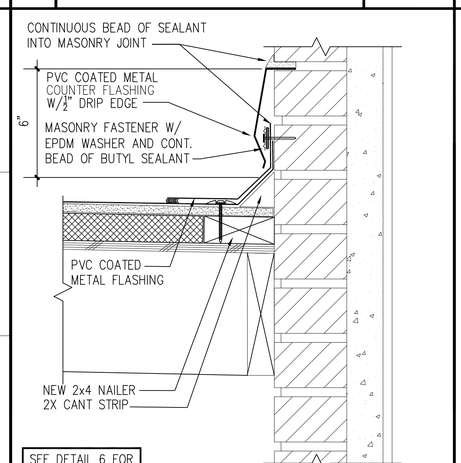

12 CHIMNEY @ ROOF 3"=1'-0"

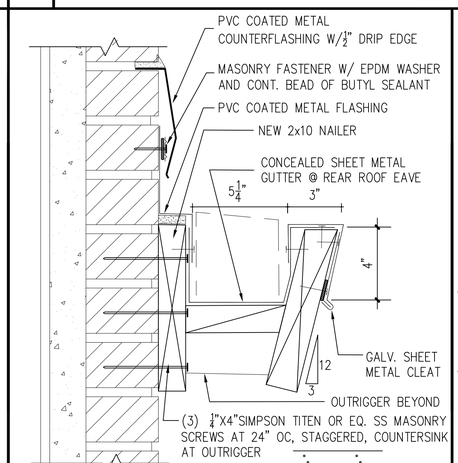

9 CHIMNEY @ GUTTER 3"=1'-0"

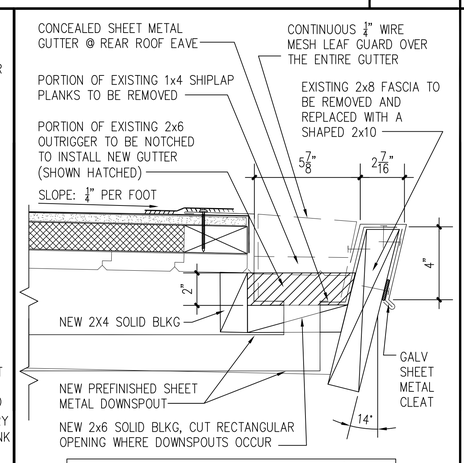

6 CONCEALED GUTTER 3"=1'-0"

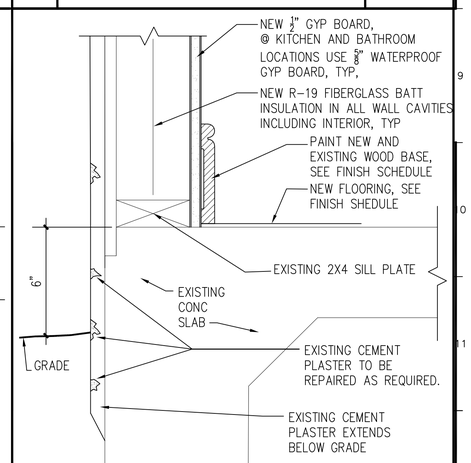

3 EXTERIOR WALL SILL 3"=1'-0"

OFFICE OF THE STATE FIRE MARSHAL
APPROVED FIRE AND PANIC ONLY
10/1/2026
25-3084
SINCE 1885
Approval of this plan does not authorize or approve any omission or deviation from applicable regulations. Final approval is subject to field inspection. One set of approved plans shall be available on the project site at all times.

GENERAL SERVICES

Department of General Services
Architecture & Engineering Sections
State of California
Real Estate Services Division
Project Management & Development Branch
707 Third Street, Suite 4-105
West Sacramento, California 95605

LICENSED ARCHITECT
David Michael Solomon
C22706
REN. 09/30/2027
STATE OF CALIFORNIA

Issue		
No.	Date	Description
1	8/29/25	
2	9/14/26	CHANGED FIREPLACE INSERT

Project
STAFF RESIDENCES REHABILITATION
26501 AVENUE 140
PORTERVILLE, CA 93257
DEVELOPMENTAL SERVICES

Supervisor	Designed	Drawn
D. S.	E. K.	E. K.

DSA App No. N/A
SFM Permit No. 25-S-3084-C-NW

Sheet Title
VARIOUS DETAILS BLDG 104

Project Number 0000000000006803
Reference North
Sheet Scale AS SHOWN
Sheet Number AA50 of

ISSUE DATE: OCTOBER 28, 2026

Copyright © 2020, California Department of General Services - Real Estate Services Division

CAD File: X:\Projects\00xxxx\006803\DWG\PLT\AA50 VARIOUS DETAILS UNIT 104.dwg Plot Date: Sep 16, 2026 - 9:46am Plotted by: jgaldame

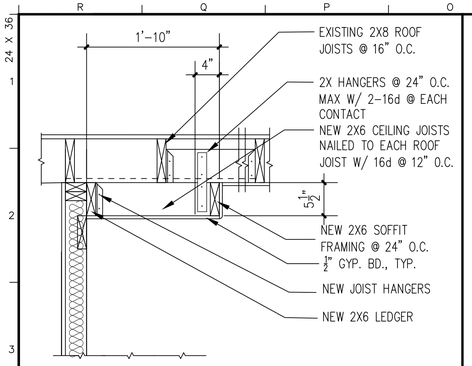

13 KITCHEN SOFFIT DTL 2 1"=1'-0"

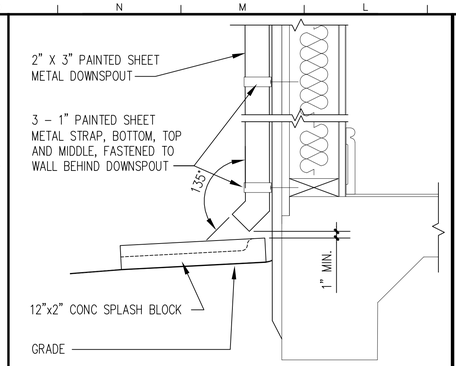

10 DOWNSPOUT 3"=1'-0"

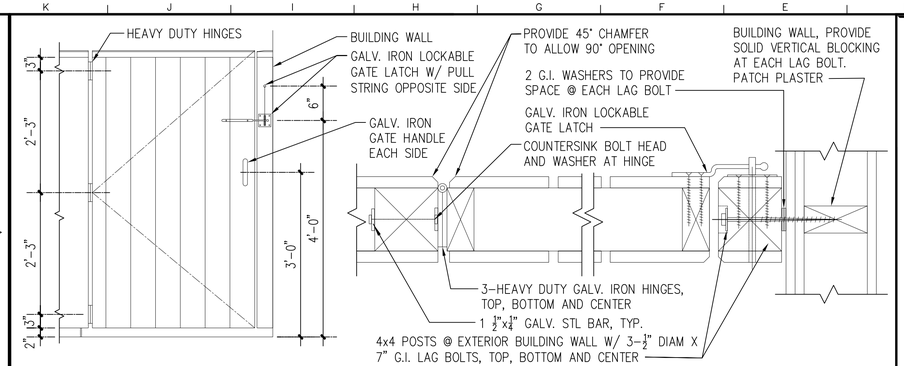

4 GATE ELEVATION AND DETAIL

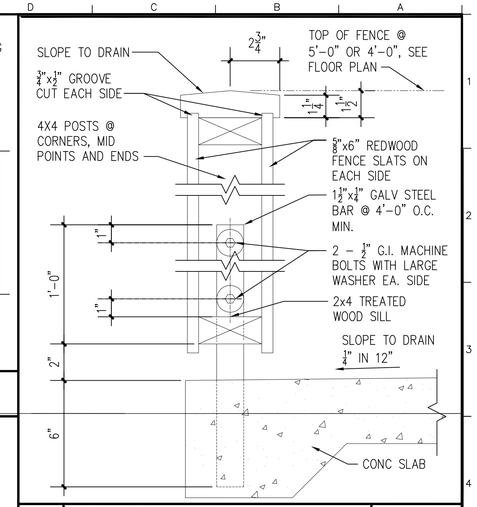

1 FENCE DETAIL

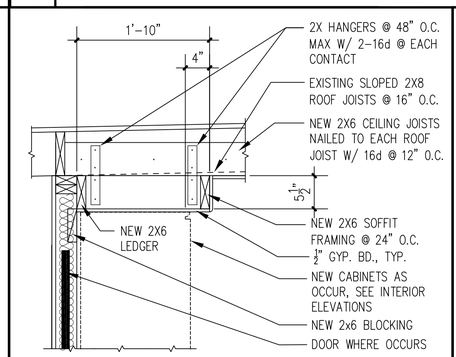

8 KITCHEN SOFFIT DTL 1 1"=1'-0"

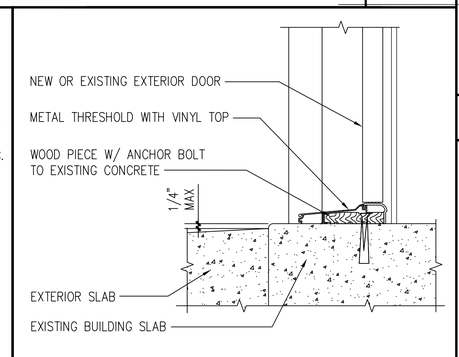

5 THRESHOLD DETAIL 3"=1'-0"

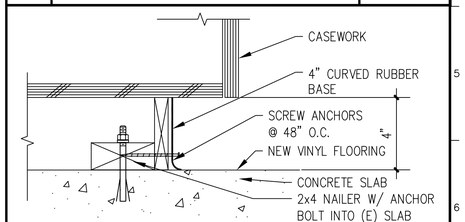

2 CABINET BASE 3"=1'-0"

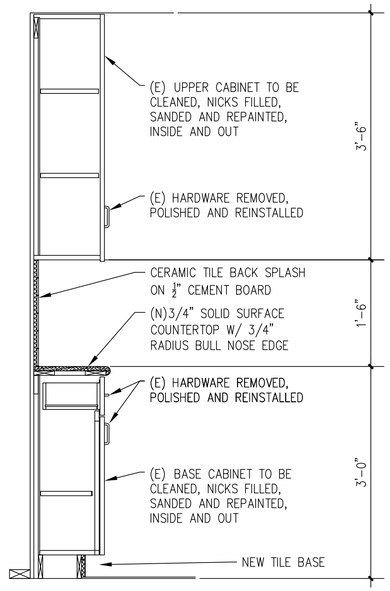

A06_CW01

12 BATHROOM CABINET 1"=1'-0"

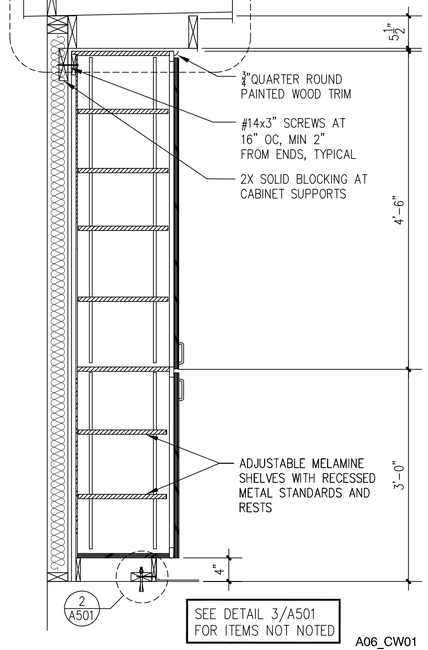

A06_CW01

9 PANTRY CABINET 1"=1'-0"

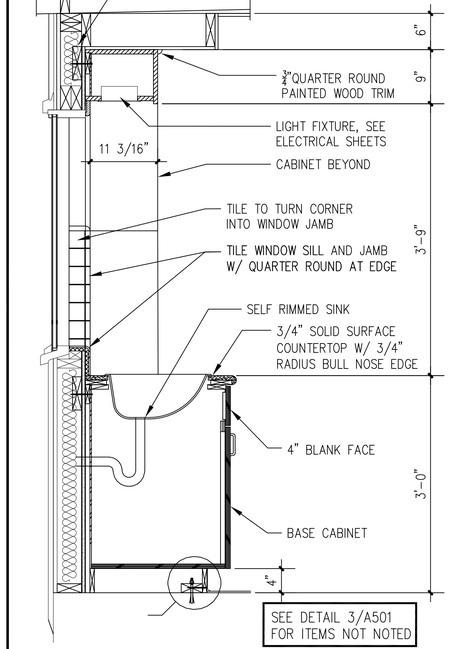

6 CABINET @ SINK 1"=1'-0"

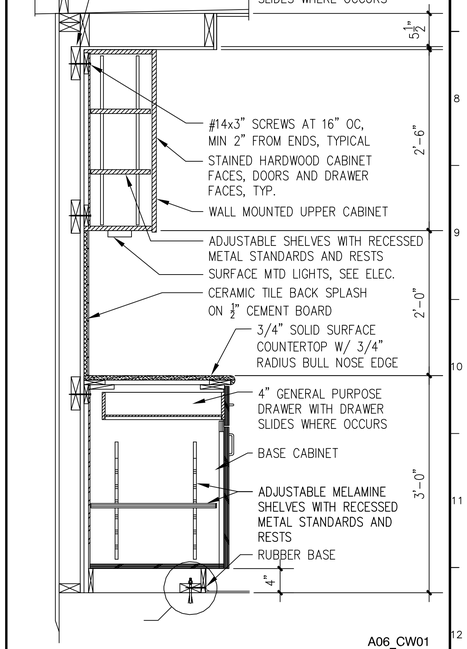

A06_CW01

3 TYPICAL CABINET 1"=1'-0"

THE SCOPE OF WORK INVOLVED IN THIS PROJECT IS EXEMPT FROM THE DIVISION OF THE STATE ARCHITECT ACCESSIBILITY REQUIREMENTS IN ACCORDANCE WITH TITLE 24, CALIFORNIA CODE OF REGULATIONS, 2016 CALIFORNIA BUILDING CODE.

OFFICE OF THE STATE FIRE MARSHAL
APPROVED FIRE AND PANIC ONLY
01/21/26
25-3084
Approval of this plan does not authorize or approve any omission or deviation from applicable regulations. Final approval is subject to field inspection. One set of approved plans shall be available on the project site at all times.

DGS GENERAL SERVICES
Department of General Services
Architecture & Engineering Sections
State of California
Real Estate Services Division
Project Management & Development Branch
707 Third Street, Suite 4-105
West Sacramento, California 95605

LICENSED ARCHITECT
DAVID M. SOLOMON
C-22708
REN. 08/30/23
STATE OF CALIFORNIA

Issue No.	Date	Description
1	8/29/25	

Project
STAFF RESIDENCES REHABILITATION
26501 AVENUE 140
PORTERVILLE, CA 93257

DEVELOPMENTAL SERVICES

Supervisor	Designed	Drawn
D. S.	E. K.	E. K.

DSA App No.	SFM Permit No.
N/A	25-S-3084-C-NW

Sheet Title
VARIOUS DETAILS BLDG 104

Project Number
000000000006803

Reference North

Sheet Scale
AS SHOWN

Sheet Number
AA51
of

© Copyright 2020, California Department of General Services - Real Estate Services Division

ISSUE DATE: OCTOBER 28, 2026

CAD File: X:\Projects\00xxxx\006803\DWG\PLTAA51 VARIOUS DETAIL UNIT 104.dwg Plot Date: Sep 08, 2025 - 10:45am, Plotted by: ekgilgen

4 SYMBOLS — 1" = 1'-0"

SYMBOL	DESCRIPTION	DETAIL REF
CFx (0'-0")	CF - T/FTG ELEVATION GIVEN	
Fx (0'-0")	SPREAD FTG - T/FTG ELEVATION GIVEN	
ELEV	SPOT ELEVATION MARKER	
TYPE MARK / WEIGHT	MEP EQUIPMENT	
-1"	SLAB ON GRADE STEP	10 / S530

3 ABBREVIATIONS — NOT TO SCALE

AB.....Anchor Bolt
ABV.....Above
AFF.....Above Finish Floor
BEV.....Beveled
BLK.....Block
BLW.....Below
B/.....Bottom of
BOT.....Bottom
BT.....Between
CF.....Continuous Footing
CJ.....Cold Joint
CLJ.....Control Joint
CLR.....Clear
CMU.....Concrete Masonry Unit
CNTR.....Center
CNJ.....Construction Joint
CONC.....Concrete
CONT.....Continuous or Continuity
CONTR.....Contractor
CJP.....Complete Joint Penetration
CSK.....Countersink
DCW.....Demand Critical Weld
DBL.....Double
DF.....Douglas Fir
DIA.....Diameter
DL.....Dead Load
do.....Ditto
DWG.....Drawing
(E).....Existing
EA.....Each
EF.....Each Face
EJ.....Expansion Joint
EL.....Elevation
EN.....Edge Nailing
EOS.....Edge of Slab
EQ.....Equal
ES.....Each Side
EW.....Each Way
EWEF.....Each Way Each Face
F/.....Face of
FB.....Flat Bar
FC.....Framing Clip
FF.....Finish Flr of Face of Fascia
FS.....Far Side
FT.....Footing
GA.....Gauge or Gage
GALV.....Galvanized
GLB.....Glued Laminated Beam
HB.....Headed Bolt
HD.....Holddown
HDR.....Header
HNGR.....Hanger
HSB.....High Strength Bolt
HSS.....Hollow Structural Section
HT.....Height
ICC.....International Code Council
JH.....Joist Hanger
K.....Kips (1000 LBS)
LAG.....Lag Bolt
LL.....Live Load
LLH.....Long Leg Horizontal
LLV.....Long Leg Vertical
LW.....Light Weight
LWIC.....Light Weight Insulating Conc
MB.....Machine Bolt
MFR.....Manufacturer
(N).....New
NIC.....Not in Contract
NS.....Near Side
NTS.....Not to Scale
NW.....Normal Weight
OC.....On Center
OH.....Opposite Hand
OPNG.....Opening
OSB.....Oriented Strand Board
PJP.....Partial Joint Penetration
PL.....Plate
PLY.....Plywood Sheathing
PT.....Pressure Treated
RWD.....Redwood
REINF.....Reinforcing Steel
REQD.....Required
RH.....Roof Hatch
SC.....Slip Critical
SCHED.....Schedule
SIM.....Similar
SLRS.....Seismic Load Resisting System
SMS.....Sheet Metal Screw
SP.....Structural Panel
SQ.....Square
STF.....Stiffener
STL.....Steel
STGR.....Staggered
T&B.....Top & Bottom
T&G.....Tongue & Groove
THRD.....Threaded
TN.....Toe Nail
TPS.....Top Plate Splice
T/.....Top of
UNO.....Unless Noted Otherwise
W/.....With
W/O.....Without
WP.....Work Point
WS.....Wood Screw
WWF.....Welded Wire Fabric
CL.....Centerline
WF.....Wide Flange
#.....Pounds

2 DESIGN CRITERIA — NOT TO SCALE

1. CODES AND STANDARDS
   - A. 2022 CALIFORNIA BUILDING CODE
   - B. ASCE 7-16 (MINIMUM BUILDING LOADS)
   - C. ACI 318-19 (CONCRETE)
   - D. TMS 402-16 (CONCRETE MASONRY)
   - E. AISC 360-16 (STRUCTURAL STEEL)
   - F. 2018 NDS & SDPWS 2021 (WOOD)
2. VERTICAL LOADS (LIVE LOADS ARE REDUCIBLE WHERE PERMITTED)
   - A. ROOF DEAD LOAD = (10.5psf - 3 BED) (9.5PSF- 2 BED) (13.5 PSF- DUPLEX)
   - B. ROOF LIVE LOAD = _20_ psf
3. LATERAL LOADS
   - A. WIND
     - a. BASIC WIND SPEED: V = _95_ mph
     - b. EXPOSURE = _C_
     - c. I = _1.0_
   - B. SEISMIC:
     - a. RISK CATEGORY: _II_
     - b. I = 1.0__
     - c. S_S = _0.590_
     - d. S_1 = 0.226_
     - e. SITE CLASS: _D (DEFAULT)_
     - f. SDC _D
     - g. F_A = _1.328_
     - h. S_{DS} = _0.523_
4. SOILS VALUES ALLOWABLE SOILS PRESSURE
   - A. DL _2000_ psf
   - B. DL+LL _2000__ psf
   - C. DL+LL+E/1.4 __2667__ psf
   - D. PASSIVE EARTH PRESSURE = _300_ pcf
   - E. COEFFICIENT OF FRICTION = _0.3_
   - F. FOOTING MININMUM DEPTH = _12_
   - G. MINIMUM WIDTH (cont) = _12_ (cont. ftgs), _24_ (isolated pads)

1 GENERAL NOTES — NOT TO SCALE

1. INTERPRETATION OF DRAWINGS AND SPECIFICATIONS
   - A. FOR CONVENIENCE, SPECIFICATIONS HAVE BEEN PREPARED FOR THIS PROJECT AND ARE ARRANGED IN SEVERAL SECTIONS, BUT SUCH SEPARATION SHALL NOT BE CONSIDERED AS THE LIMITS OF THE WORK REQUIRED OF ANY SEPARATE TRADE. THE TERMS AND CONDITIONS OF SUCH LIMITATIONS ARE WHOLLY BETWEEN THE CONTRACTOR AND HIS SUBCONTRACTORS.
2. SAFETY NOTE:
   - A. IT IS THE CONTRACTORS RESPONSIBILITY TO COMPLY WITH THE PERTINENT SECTIONS, AS THEY APPLY TO THIS PROJECT, OF THE "CONSTRUCTION SAFETY ORDERS" ISSUED BY THE STATE OF CALIFORNIA LATEST EDITION, AND ALL OSHA REQUIREMENTS.
   - B. THE STATE DOES NOT ACCEPT ANY RESPONSIBILITY FOR THE CONTRACTOR'S FAILURE TO COMPLY WITH THESE REQUIREMENTS.
   - C. THE CONTRACTOR SHALL BE RESPONSIBLE FOR ADEQUATE DESIGN AND CONSTRUCTION OF ALL FORMS AND SHORING REQUIRED. CONTRACTOR SHALL PROVIDE ADEQUATE STAYS AND BRACING OF ALL FRAMING UNTIL ALL ELEMENTS OF THE DESIGN HAVE BEEN INCORPORATED INTO THE PROJECT.
3. WHERE NO SPECIFIC DETAIL IS SHOWN, THE CONSTRUCTION SHALL BE IDENTICAL OR SIMILAR TO THAT INDICATED FOR LIKE CASES OF CONSTRUCTION ON THIS PROJECT. SHOULD THERE BE ANY QUESTION, CONTACT THE STATE PRIOR TO PROCEEDING.
4. WHEN CONSTRUCTION ATTACHES TO AN EXISTING BUILDING, A COMPLETE SET OF DRAWINGS OF THE EXISTING BUILDING SHALL BE KEPT ON THE JOB SITE.
5. DO NOT SCALE DRAWINGS. CONTACT THE STATE FOR ANY DIMENSIONS NOT SHOWN.
6. THE CONTRACTOR SHALL NOTIFY THE STATE A MINIMUM OF TWO WORKING DAYS PRIOR TO PROCEEDING WITH THE FOLLOWING WORK:
   - A. POURING OF ANY CONCRETE

STRUCTURAL SHEET INDEX

SHEET NUMBER	SHET NAME
S001	STRUCTURAL GENERAL NOTES
S002	STRUCTURAL MATERIAL & INSPECTION NOTES
S510	DETAILS
S530	TYPICAL DETAILS
SA211	FOUNDATION PLAN - 2 BED

THE SCOPE OF WORK INVOLVED IN THIS PROJECT IS EXEMPT FROM THE DIVISION OF THE STATE ARCHITECT ACCESSIBILITY REQUIREMENTS IN ACCORDANCE WITH TITLE 24, CALIFORNIA CODE OF REGULATIONS, 2016 CALIFORNIA BUILDING CODE.

OFFICE OF THE STATE FIRE MARSHAL
APPROVED FIRE AND PANIC ONLY
01/21/26
25-3084
Approval of this plan does not authorize or approve any omission or deviation from applicable regulations. Final approval is subject to field inspection. One set of approved plans shall be available on the project site at all times.

GENERAL SERVICES
Department of General Services
Architecture & Engineering Sections
State of California
Real Estate Services Division
Project Management & Development Branch
707 Third Street, Suite 4-105
West Sacramento, California 95605

REGISTERED PROFESSIONAL ENGINEER — GAURAV BALI — No. C-85737 — CIVIL — STATE OF CALIFORNIA
8/27/2025

Issue		
No.	Date	Description
1	08/29/25	

Project
STAFF RESIDENCE REHABILITATION
26501 AVENUE 140
PORTERVILLE, CA 93257

DEVELOPMENTAL SERVICES

Supervisor	Designed	Drawn
JD	GB	GB

DSA App No.	SFM Permit No.
NA	25-S-3084-C-DR

Sheet Title
STRUCTURAL GENERAL NOTES

Project Number
000000000006803

Sheet Scale

Sheet Number
S001

Copyright © 2021, California Department of General Services, Real Estate Services Division

V2

ISSUE DATE: OCTOBER 28, 2026

RELATIVE BORDER SCALE IN INCHES

X:\Projects\00xxxx\006803\RVT\STR\006803_STR_CENTRAL.rvt
8/27/2025 2:01:06 PM

TESTS AND INSPECTIONS
TESTS AND INSPECTIONS SHALL BE PROVIDED BY A QUALIFIED TESTING AGENCY AS REQUIRED BELOW AND SHALL CONFIRM TO THE REQUIREMENTS OF THE CBC LISTED. THE FOLLOWING ITEMS REQUIRE STRUCTURAL TESTS. FOR SPECIFIC REQUIREMENTS OF STRUCTURAL TESTS, SEE SPECIFICATIONS AND GENERAL NOTES.

1. SOIL
2. CONCRETE REINFORCEMENT
3. CAST-IN-PLACE CONCRETE
4. POST-INSTALLED ANCHORS
5. GROUTED DOWELS

THE FOLLOWING ITEMS REQUIRE SPECIAL INSPECTIONS BY A CERTIFIED SPECIAL INSPECTOR IN ACCORDANCE WITH CBC 1704 AND 1705.

SPECIAL INSPECTIONS AND TESTS - CONCRETE

TYPE	CONT. INSPECTION	PERIODIC INSPECTION	REFERENCED STANDARD
Inspect concrete reinforcement, including prestressing tendons, and verify placement	-	X	ACI 318: CH 20, 25.2, 25.3, 26.6.1-26.6.3; CBC 1908.4
Rebar welding: verify weldability of reinforcing bars other than ASTM A706	-	X	AWS D1.4; ACI 318 26.6.4
Rebar welding: inspect single-pass fillet welds, maximum 5/16"	-	X	
Rebar welding: inspect all other welds	X	-	
Inspect concrete anchors cast in concrete	-	X	ACI 318: 17.8.2
Inspect adhesive anchors installed in horizontally or upwarkly inclined orientations to resist sustained tension loads	X	-	ACI 318: 17.8.2.4
Inspect post-installed mechanical anchors not defined above	-	X	ACI 318: 17.8.2
Verify use of required deisgn mix	-	X	ACI 318: Ch. 19, 26.4.3, 26.4.4; CBC: 1904.1, 1904.2, 1908.2, 1908.3
Prior to concrete placement, fabricate specimens for strength tests, perform slump and air content tests, and determine the temperature of the concrete	X	-	ASTM C172; ASTM C31; ACI 318: 26.5, 26.12; CBC 1908.10
Inspect concrete and shotcrete placement for proper application techniques	X	-	ACI 318: 26.5; CBC: 1908.6, 1908.7, 1908.8
Verify maintenance of specified curing temperature and techniques	-	X	ACI 318: 26.5.3-26.5.5; CBC 1908.9
Inspect prestressed concrete for application of prestressign forces	X	-	ACI 318: 26.10
Inspect prestressed concrete for grouting of bonded prestressing tendons	X	-	
Inspect erection of precast concrete members	-	X	ACI 318: 26.9
Verify in-situ concrete strength, prio to stressing o ftendons in post-tensioned concrete and prior to removal of shores and forms from beams and structural slabs	-	X	ACI 318: 26.11.2
Inspect formwork for shape, location, and dimensions of the concrete member being formed	-	X	ACI 318: 26.11.1.2(b)

SPECIAL INSPECTIONS AND TESTS - SOILS

TYPE	CONT. INSPECTION	PERIODIC INSPECTION
Verify materials below shallow foundations are adequate to achieve the design bearing capacity	-	X
Verify excavations are extended to proper depth and have reached proper material	-	X
Perform classification and testing of compacted fill materials	-	X
Verify use of proper materials, densities and lift thicknesses during placement and compaction of compacted fill	X	-
Prior to placement of compacted fill, inspect subgrade and verify that site has been prepared peoperly.	-	X

1. ANCHORS SHALL BE INSTALLED IN ACCORDANCE WITH THE REQUIREMENTS GIVEN IN THE ICC REPORT.
2. SPECIAL INSPECTION IS REQUIRED UNLESS NOTED OTHERWISE. PROVIDE SPECIAL INSPECTION AS INDICATED IN THE ICC REPORT.
3. WHEN INSTALLING DRILLED-IN ANCHORS IN EXISTING CONCRETE OR MASONRY, USE CARE AND CAUTION TO AVOID CUTTING OR DAMAGING EXISTING REINFORCING BARS. DO NOT INSTALL ANCHORS IN PRESTRESSED CONCRETE ELEMENTS.
4. ALL ANCHORS SHALL BE INSTALLED TO THE MAXIMUM DEPTH LISTED IN THE TABLE, UNLESS NOTED OTHERWISE ON THE DETAIL. USE OF OTHER EMBEDMENT DEPTHS MUST BE APPROVED BY THE STRUCTURAL ENGINEER. FOR ANCHORS WITH EMBEDMENTS NOT LISTED, INTERPOLATE BETWEEN THE VALUES GIVEN.
5. THE MINIMUM THICKNESS OF THE CONCRETE SHALL BE 1.5 TIMES THE EMBEDMENT DEPTH UNLESS NOTED OTHERWISE IN THE ICC REPORT.
6. ANCHORS INSTALLED FROM THE BOTTOM INTO METAL DECK WITH CONCRETE SHALL BE INSTALLED IN THE CENTER OF THE LOW FLUTE OF THE DECKING UNLESS NOTED OTHERWISE IN ICC REPORT. THE DECKING SHALL HAVE A MINIMUM THICKNESS OF 20 GAUGE. THE MINIMUM THICKNESS OF THE CONCRETE ABOVE THE HIGH FLUTE OF THE METAL DECK SHALL BE 3.25" OR THE TOTAL THICKNESS OF CONCRETE SHALL BE 1.5 TIMES THE EMBEDMENT DEPTH, WHICHEVER IS GREATER. SEE ICC REPORT FOR ADDITIONAL REQUIREMENTS, INCLUDING MINIMUM DIMENSIONS FOR FLUTE WIDTH AND DEPTH.
7. BASIS OF DESIGN POST-INSTALLED CONCRETE ANCHORS ARE THUS:
   A. EXPANSION ANCHORS:
      a. SIMPSON STRONG BOLT 2 (ICC ESR-3037)
      b. HILTI KB-TZ (ICC ESR-1917)
      c. DEWALT POWER-STUD+ SD2 (ICC ESR-2502)
   B. SCREW ANCHORS:
      a. SIMPSON TITEN HD (ICC ESR-2713)
      b. HILTI KWIK HUS-EZ (ICC ESR-3027)
      c. DEWALT SCREW-BOLT+ (ICC ESR-3889)
   C. EPOXY:
      a. HILTI HY-100
      b. SIMPSON SET-XP
      c. DEWALT AC-200+
8. BASIS OF DESIGN POST-INSTALLED MASONRY ANCHORS ARE THUS:
   A. EXPANSION ANCHORS:
      a. SIMPSON STRONG-BOLT 2 (IAPMO UES ER-240)
      b. HILTI KB-TZ (ICC ESR-3785)
      c. DEWALT POWER-STUD+ SD1 (ICC ESR-2966)
   B. SCREW ANCHORS:
      a. SIMPSON TITEN HD (ICC ESR-1056)
      b. HILTI KWIK HUS-EZ (ICC ESR-3056)
      c. DEWALT SCREW-BOLT+ (ICC ESR-4042)
9. THE TESTING OF THE ANCHORS SHALL BE DONE BY A QUALIFIED TESTING AGENCY AND A REPORT OF THE TEST RESULTS SHALL BE SUBMITTED TO THE STATE. SEE NOTES ON THIS SHEET FOR TESTING CRITERIA.

EXPANSION ANCHOR TORQUE TEST VALUES (FT-LB)

	CONCRETE					MASONRY				
DIAMETER	1/4"	3/8"	1/2"	5/8"	3/4"	1/4"	3/8"	1/2"	5/8"	3/4"
SIMPSON	4	30	65	80	150	4	20	35	55	100
HILTI	-	25	40	60	110	-	15	25	35	70
DEWALT	-	20	40	60	110	-	20	40	50	-

3 ANCHOR NOTES — NOT TO SCALE

1. ALL FRAMING LUMBER SHALL BE DOUGLAS FIR UNO. GRADE SHALL BE AS FOLLOWS:
   A. JOISTS AND RAFTERS: #1
   B. POSTS, BEAMS, HEADERS: #1
   C. STUDS, PLATES, BLOCKS, LIGHT FRAMING AND MISC: #2
2. STRUCTURAL SHEATHING:
   A. ROOF SHEATHING: 15/32" APA RATED SHEATHING, 32/16 LOAD RATING, EXPOSURE 1, PS1-09, 5 PLY PLYWOOD.
   B. FLOOR SHEATHING: 23/32" APA RATED STURD-I-FLOOR, 24 OC, T&G, PS1-09 .
   C. WALL SHEATHING: 15/32" APA RATED SHEATHING, EXPOSURE 1, PS1-09, 5 PLY PLYWOOD.
3. LUMBER IN CONTACT WITH CONCRETE OR MASONRY 6'-0" ABOVE GRADE SHALL BE PRESSURE TREATED.
4. REJECTION OF WOOD MEMBERS: THE PROVISIONS OF DOC PS 20 (AS REFERENCED BY CBC 2303.1.1) WHICH PERMITS 5% OF THE MATERIAL TO FALL BELOW GRADE SHALL NOT BE CONSTRUED TO PERMIT BELOW-GRADE MATERIAL TO BE USED AS LOAD-CARRYING MEMBERS WHICH HAVE BEEN DEISGNED FOR SPECIFIED ALLOWABLE STRESSES AND ACCEPTABLE SAFETY FACTORS. MATERIALS WHICH FALL BELOW GRADE SHALL BE REJECTED FOR LOAD-CARRYING USE. WOOD MEMBERS WHICH ARE REQUIRED TO CARRY DESIGN LOADS AND WHICH THE STATE JUDGES TO BE MISGRADED SHALL BE REINSPECTED BY A QUALIFIED LUMBER GRADING INSPECTOR TO VERIFY THE PROPER GRADING OF THE MATERIAL. WOOD MEMBERS WHICH HAVE PERMISSIBLE GRADE CHARACTERISTICS OR DEFECTS IN SUCH COMBINATION AS TO AFFECT THE SERVICEABILITY OF THE MEMBER SHALL BE REJECTED BY THE PROJECT INSPECTOR WITH THE CONCURRENCE OF THE STATE.
5. LAMINATED VENEER LUMBER (LVL): AS MANUFACTURED BY RED-BUILT ICC-ES REPORT ESR-2993 OR EQUAL.
6. GLUED LAMINATED BEAMS:
   A. 24FV4 FOR SIMPLE SPAN BEAMS AND 24FV8 FOR CANTILEVERED AND CONTINUOUS BEAMS.
   B. APPEARANCE: INDUSTRIAL GRADE TYP; ARCHITECTURAL GRADE IF EXPOSED.
   C. CAMBER TO RADIUS OF 3500 FT UNO.
   D. GLUED-LAMINATED BEAMS SHALL BE INSPECTED PER CBC 1704.2.5 BY A GLUE FABRICATION INSPECTOR. ALL BEAM SHALL BE STAMPED WITH AN IDENTIFICATION MARK
7. PREFABRICATED WOOD TRUSSES: SEE SPECIFICATIONS
8. FRAMING HARDWARE: AS MANUFACTURED BY SIMPSON CO. OR APPROVED EQUAL. SIMPSON DESIGNATIONS ARE USED.
9. NAILS: COMMON WIRE GAGE UNO. NAILING SHALL CONFORM TO CBC FASTENING SCHEDULE AT A MINIMUM. USE OF MACHINE NAILING IS SUBJECT TO A SATISFACTORY JOBSITE DEMONSTRATION AND THE APPROVAL OF THE STATE. THE APPROVAL IS SUBJECT TO CONTINUED SATISFACTORY PERFORMANCE. IF THE NAIL HEADS PENETRATE THE OUTER PLY MORE THAN WOULD BE NORMAL FOR A HAND-HELD HAMMER, OR IF MINIMUM ALLOWABLE EDGE DISTANCES ARE NOT MAINTAINED, THE PERFORMANCE WILL BE DEEMED UNSATISFACTORY AND MACHINE NAILING SHALL BE DISCONTINUED. FOR PLYWOOD SHEARWALLS WITH PLYWOOD ON BOTH SIDES OF WALL, MACHINE NAILING WILL BE ALLOWED ONLY ON THE PLYWOOD INSTALLED FIRST.
10. BOLTS: ASTM A307.
11. ANCHOR RODS: ASTM F1554, F_y 36 KSI.
12. GLUE FLOOR SHEATHING AT T&G JOINTS AND TO SUPPORTING MEMBERS.
13. NAILS, BOLTS, AND SCRWEWS FASTENED TO PRESSURE PRESERVATIVE TREATED AND FIRE RETARDANT TREATED WOOD SHALL BE HOT-DIPPED ZINC COATED GALVANIZED.

2 WOOD NOTES — NOT TO SCALE

1. ALL FOUNDATION WORK SHALL BE DONE IN ACCORDANCE WITH THE REQUIREMENTS OF THE CBC AND SOILS REPORT BY: GEOCON CONSULTANTS INC. RPORT # S1445-05-16 DATED JULY 2020.
2. FOUNDATIONS SHALL BEAR ON NATIVE UNDISTURBED SOIL. PROVIDE SOIL REVIEW AFTER EXCAVATION BY THE TESTING AND INSPECTION AGENCY. PROVIDE COMPACTION IF REQ'D AS DETERMINED BY THE T&I AGENCY OR SOILS ENGINEER.
3. ALL FILLING, BACKFILLING AND COMPACTION SHALL BE DONE UNDER THE OBSERVATION OF A REPRESENTATIVE OF THE SOILS ENGINEER AND MUST BE COMPACTED TO THE MINIMUM DENSITY SPECIFIED IN ACCORDANCE WITH THE PROCEDURE OUTLINED IN THE SOILS REPORT.
4. BUILDING PAD CONSTRUCTION SHALL CONFORM TO THE REQUIREMENTS OF THE SOILS REPORT. THE EXTENT AND DEPTH OF OVEREXCAVATION AND PLACEMENT OF ENGINEERED FILL SHALL AT A MINIMUM BE AS SHOWN ON THE PLANS. FINAL DEPTH AND EXTENT OF EXCAVATION AND FILL SHALL BE DETERMINED AT TIME OF CONSTRUCTION BY A REPRESENTATIVE OF THE SOILS ENGINEER. FOUNDATION DEPTHS INDICATED ON PLANS ARE FOR ESTIMATING PURPOSES ONLY.
5. BOTTOMS OF ALL FOUNDATIONS SHALL BE LEVEL. CHANGES IN BOTTOM OF FOUNDATION ELEVATION SHALL BE MADE ACCORDING TO STEPPED FOOTING DETAIL ON THE TYPICAL DETAIL.
6. FOUNDATION CONCRETE MAY BE PLACED DIRECTLY INTO NEAT EXCAVATIONS PROVIDED THE EXCAVATIONS ARE STABLE (AS DETERMINED BY A REPRESENTATIVE OF THE SOILS ENGINEER). OTHERWISE, FOUNDATIONS SHALL BE FULLY FORMED. USE MINIMUM PLANKING SHOWN TO PROTECT AGAINST SLOUGHING, AS REQUIRED. PLANKING DOES NOT REPLACE FORMWORK REQUIRED TO STABILIZE EXCAVATION.
7. THE SURFACE OF ALL HORIZONTAL CONSTRUCTION JOINTS SHALL BE CLEANED & ROUGHENED BY EXPOSING CLEAN AGGREGATE SOLIDLY EMBEDDED IN MORTAR MATRIX.
8. NOTIFY THE ENGINEER 48 HOURS BEFORE CASTING FOUNDATIONS.
9. A REPRESENTATIVE OF THE SOILS ENGINEER SHALL ADVISE THE BUILDING OFFICIAL IN WRITING THAT:
   a. THE BUILDING PAD WAS PREPARED IN ACCORDANCE WITH THE SOILS REPORT.
   b. THE UTILITY TRENCHES HAVE BEEN PROPERLY BACKFILLED AND COMPACTED AND;
   c. THE FOUNDATION EXCAVATION DEPTH AND MATERIAL ARE ADEQUATE TO ACHIEVE DESIGN BEARING CAPACITY; AND FORMING COMPLY WITH THE SOILS REPORT AND APPROVED PLAN.
10. DO NOT UNDERMINE EXISTING FOOTING, WHERE OCCUR, WITHOUT ENGINEERED SHORING.

5 FOUNDATION NOTES — 1 : 1

1. CONCRETE MIX DESIGNS (INCLUDING TEST RECORD METHOD) SHALL BE PREPARED BY A CIVIL ENGINEER LICENSED IN THE STATE OF CALIFORNIA, REVIEWED BY THE STATE'S TESTING LABORATORY AND SUBMITTED TO THE STATE FOR REVIEW.
2. DIMENSIONS SHOWN FOR LOCATION OF REINFORCING ARE TO THE FACE OF MAIN BARS AND DENOTE CLEAR COVERAGE. CONCRETE COVERAGE SHALL BE AS FOLLOWS. CONCRETE:
   A. DEPOSITED DIRECTLY AGAINST GROUND (EXCEPT SLABS).... 3"
   B. EXPOSED TO GROUND BUT PLACED IN FORMS.....2"
   C. EXPOSED TO GROUND (TOP BARS).....2" CLR FROM TOP UNO
   D. TIED COLUMNS (MAIN BARS).....2"
   E. BEAMS (TOP BARS).....1-1/2"
   F. BEAMS (ALL OTHER MAIN REINFORCING).....2"
   G. WALLS (EXTERIOR FACE #5 & SMALLER).....1-1/2"
   H. WALLS (EXTERIOR FACE #6 & LARGER).....2"
   I. WALLS (INTERIOR FACE).....3/4"
   J. SLABS (ON FORMS).....3/4"
   K. SLABS (ON GROUND).....2" CLR FROM TOP UNO
3. SPLICES IN CONTINUOUS REINFORCEMENT SHALL BE LAPPED UNO. SEE LAP SPLICE SCHEDULE. SPLICES IN ADJACENT BARS SHALL BE NOT LESS THAN 5'-0" APART. SPLICE CONTINUOUS BARS IN SOIL-BEARING GRADE BEAMS AS FOLLOWS: TOP BARS AT CENTERLINE OF SUPPORT, BOTTOM BARS AT MID-SPAN, BOTTOM BARS AT CENTERLINE OF SUPPORT. ALL BARS SIZE #14 AND LARGER SHALL BE CONTINUOUS FOR THE FULL LENGTH SHOWN. SPLICES IN WWF SHALL BE 1-1/2 MESHES WIDE.
4. PROVIDE HOOKS AT ENDS OF ALL REINFORCING AT ENDS, CORNERS AND INTERSECTIONS U.N.O. ALL HOOKS SHALL BE STANDARD HOOKS UNLESS OTHERWISE SHOWN OR NOTED.
5. NO WOOD SPREADERS ALLOWED. NO WOOD STAKES ALLOWED IN AREAS TO BE CONCRETED.
6. PROVIDE 2 - #5 X 4'-0" DIAG. REINFORCING AT MID-DEPTH OF SLAB AT ALL RE-ENTRANT CORNERS, TYP.
7. ALL SAW CUTTING SHALL BE DONE AFTER INITIAL SET HAS OCCURRED TO AVOID TEARING OR DAMAGE BY THE SAW BLADE, BUT BEFORE INITIAL SHRINKAGE HAS OCCURRED.
8. MINIMUM CONCRETE STRENGTHS, f'_c ARE THUS. SEE SPECIFICATIONS FOR MORE INFORMATION.
   A. CONTINUOUS AND SPREAD FOOTINGS: 3,000 PSI
   B. SLAB ON GRADE: 4,000 PSI
   C. FOUNDATION WALLS: 4,000 PSI
   D. RETAINING WALLS: 4,000 PSI

CONCRETE REINFORCEMENT LAP SPLICE SCHEDULE, INCHES

SPLICE CLASS	REINF LOCATION	#3	#4	#5	#6	#7	#8	#9	#10	#11
F'c = 3,000 PSI										
A	TOP	22	29	36	43	63	72	81	91	101
	OTHER	17	22	28	33	48	55	62	70	78
B	TOP	28	37	47	56	81	93	105	118	131
	OTHER	22	29	36	43	63	72	81	91	101
F'c = 4,000 PSI										
A	TOP	19	25	31	37	54	62	70	79	87
	OTHER	15	19	24	29	42	48	54	61	67
B	TOP	24	32	40	48	70	80	91	102	113
	OTHER	19	25	31	37	54	62	70	79	87

RIENFORCEMENT LAP SPLICE SCHEDULE NOTES:
A. SCHEDULE APPLIES TO UNCOATED, GRADE 60 REINFORCING STEEL AND NORMAL-WT CONCRETE.
B. ALL LAP SPLICES SHALL BE CLASS B, UNO.
C. TOP REINFORCEMENT IS HORIZONTAL REINFORCEMENT LOCATED SUCH THAT MORE THAN 12 INCHES OF FRESH CONCRETE IS CAST IN THE MEMBER BELOW THE SPLICE.
D. WHEN LIGHTWEIGHT CONCRETE IS USED, MULTIPLY LAP LENGTHS BY 1.30.
E. WHERE CLEAR SPACING OF BARS BEING SPLICED IS LESS THAN 2 BAR DIA. OR WHERE CLEAR COVER OF BARS BEING SPLICED IS LESS THAN 1 BAR DIA, MULTIPLY LAP LENGTHS BY 1.50, UNO.
F. WHERE NOTES #4 AND #5 OCCUR, MULTIPLY LAP LENGTHS BY 2.00, UNO.
G. WITH ALL REQUIRED INCREASES, LAP SPLICE LENGTH SHALL NOT BE LESS THAN 53 BAR DIA.

1 CONCRETE NOTES — NOT TO SCALE

THE SCOPE OF WORK INVOLVED IN THIS PROJECT IS EXEMPT FROM THE DIVISION OF THE STATE ARCHITECT ACCESSIBILITY REQUIREMENTS IN ACCORDANCE WITH TITLE 24, CALIFORNIA CODE OF REGULATIONS, 2016 CALIFORNIA BUILDING CODE.

OFFICE OF THE STATE FIRE MARSHAL
APPROVED FIRE AND PANIC ONLY
01/21/26
25-3084
Approval of this plan does not authorize or approve any omission or deviation from applicable regulations. Final approval is subject to field inspection. One set of approved plans shall be available on the project site at all times.

DGS GENERAL SERVICES
Department of General Services
Architecture & Engineering Sections
State of California
Real Estate Services Division
Project Management & Development Branch
707 Third Street, Suite 4-105
West Sacramento, California 95605

REGISTERED PROFESSIONAL ENGINEER GAURAV BALI No. C-85737 CIVIL STATE OF CALIFORNIA
8/27/2025

Issue

No.	Date	Description
1	08/29/25	

Project
STAFF RESIDENCE REHABILITATION
26501 AVENUE 140
PORTERVILLE, CA 93257

DEVELOPMENTAL SERVICES

Supervisor	Designed	Drawn
JD	GB	GB

DSA App No.	SFM Permit No.
NA	25-S-3084-C-DR

Sheet Title
STRUCTURAL MATERIAL & INSPECTION NOTES

Project Number
000000000006803

Sheet Scale

Sheet Number
S002

Copyright © 2021, California Department of General Services- Real Estate Services Division

v2

ISSUE DATE: OCTOBER 28, 2026

RELATIVE BORDER SCALE IN INCHES 0 1 2 3

X:\Projects\00xxxx\006803\RVT\STR\006803_STR_CENTRAL.rvt
8/27/2025 2:01:07 PM

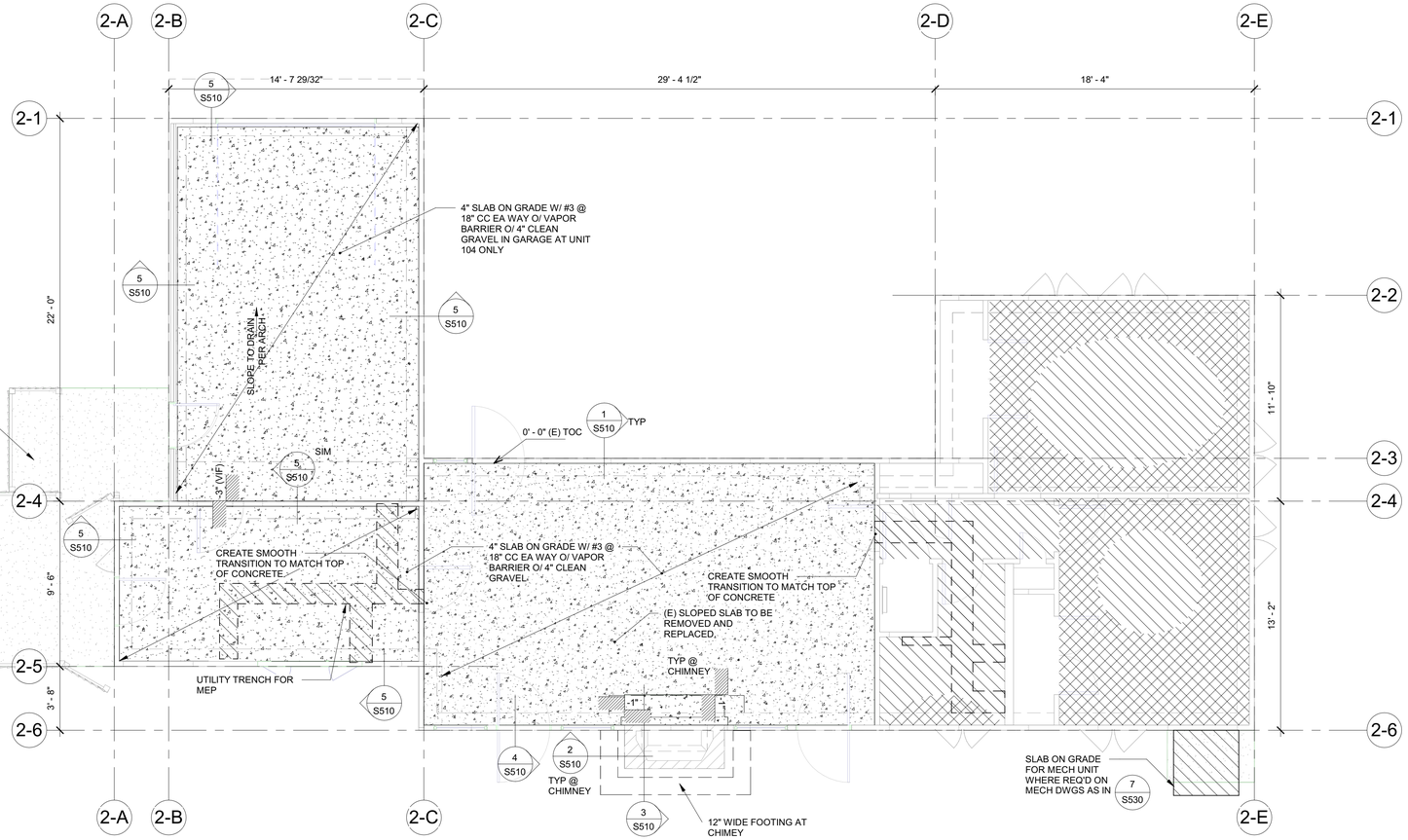

FOUNDATION PLAN APPLICABLE TO UNITS:
104,106,107

1 TYPICAL 2 BED FOUNDATION PLAN

1/4" = 1'-0"

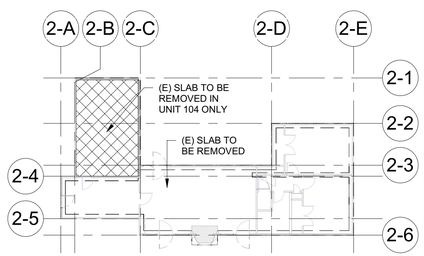

2 F.F. 2 BEDRM DEMO PLAN 1/16" = 1'-0"

1. ALL ELEVATIONS ARE REFERENCED TO THE (0' - 0") . REFERENCE POINT IS ESTABLISHED AT THE ENTRY DOOR IN EACH UNIT. EXISTING SLAB ON GRADE TOP ELEVATION VARIES. REMOVE EXISTING SLAB AND PROVIDE A LEVEL SURFACE.
2. SEE GENERAL NOTES (S001-S002) AND TYPICAL DETAILS (S530) SERIES DRAWINGS. GENERAL NOTES AND TYPICAL DETAILS ARE USED WHETHER REFERENCED OR NOT.
3. GRAPHICAL LEGEND AND ABBREVIATION DEFINITIONS ARE ON S001.
4. PREPARE SOIL BELOW NEW SLAB ON GRADE IN ACCORDANCE WITH GEOTECH REPORT. SEE FOUNDATION NOTES.
5. ALL DIMENSIONS SHOWN ARE TO FACE OF WALL OR CENTERLINE OF COLUMN/BEAM UNO.
6. PROVIDE SLAB CONTROL JOINTS PER 3 / S530
7. VERIFY ALL BUILDING DIMENSIONS WITH ARCHITECTURAL DRAWINGS AND IN THE FIELD FOR ALL DIMENSIONS REFERENCING EXISTING MATERIAL. NOTIFY THE STATE IF DISCREPANCIES OCCUR.
8. PROVIDE FOUNDATION REPAIRS PER 7 / S510
9. WHERE EXISTING SLAB IS SAWCUT AT EXISTING WALL, SAWCUT LINE TO BE MAXIMUM 1 1/2" FROM WALL.

INDICATES APPROXIMATE AREA OF SLAB TO BE GRINDED UP TO 3/8" TO BRING IT TO LEVEL. VIF THE EXTENTS AND ELEVATIONS. AREA SHOWN APPROXIMATE FOR BID PURPOSES ONLY

INDICATES APPROXIMATE AREA OF SLAB TO BE LEVELED USING LEVELING GROUT. VIF THE EXTENTS AND ELEVATIONS. AREA SHOWN APPROXIMATE FOR BID PURPOSES ONLY. SEE SPECIFICATIONS FOR GROUT.

INDICATES APPROXIMATE LOCATION FOR UTILITY TRENCH. COORDINATE EXACT LOCATION AS REQUIRED WITH MEP DRAWINGS. SEE DETAIL 9 / S530

3 FOUNDATION NOTES NOT TO SCALE

THE SCOPE OF WORK INVOLVED IN THIS PROJECT IS EXEMPT FROM THE DIVISION OF THE STATE ARCHITECT ACCESSIBILITY REQUIREMENTS IN ACCORDANCE WITH TITLE 24, CALIFORNIA CODE OF REGULATIONS, 2016 CALIFORNIA BUILDING CODE.

OFFICE OF THE STATE FIRE MARSHAL
APPROVED FIRE AND PANIC ONLY
01/21/26
25-3084
Approval of this plan does not authorize or approve any omission or deviation from applicable regulations. Final approval is subject to field inspection. One set of approved plans shall be available on the project site at all times.

DGS GENERAL SERVICES
Department of General Services
Architecture & Engineering Sections
State of California
Real Estate Services Division
Project Management & Development Branch
707 Third Street, Suite 4-105
West Sacramento, California 95605

REGISTERED PROFESSIONAL ENGINEER
GAURAV BALI
No. C-85737
CIVIL
STATE OF CALIFORNIA
8/27/2025

Issue

No.	Date	Description
1	08/29/25	

Project
STAFF RESIDENCE REHABILITATION
26501 AVENUE 140
PORTERVILLE, CA 93257

DEVELOPMENTAL SERVICES

Supervisor	Designed	Drawn
JD	GB	GB

DSA App No.	SFM Permit No.
NA	25-S-3084-C-DR

Sheet Title
FOUNDATION PLAN - 2 BED

Project Number
000000000006803

Sheet Scale

Sheet Number
SA211

Copyright © 2021, California Department of General Services - Real Estate Services Division

V2

ISSUE DATE: OCTOBER 28, 2026

X:\Projects\00xxxx\006803\RVT\STR\006803_STR_CENTRAL.rvt
8/27/2025 2:01:10 PM
24 x 36
RELATIVE BORDER SCALE IN INCHES

FOUNDATION REPAIR NOTES:

1. SAWCUT AND REMOVE THE HEAVED PORTION AREAS OF THE SLABS. EXCAVATE 24 INCHES OF EXPANSIVE SUBGRADE SOIL AND REPLACE WITH LOW-EXPANSIVE FILL (LEF). LEF MAY CONSIST OF CALTRANS CLASS 2 AGGREGATE BASE (AB) OR IMPORT SOIL PROVIDED IT HAS A "LOW" EXPANSION POTENTIAL (EI LESS THAN 20), A PLASTICITY INDEX LESS THAN 15, AND IS FREE OF ORGANIC MATERIAL, CONSTRUCTION DEBRIS, AND DELETERIOUS MATTER.LEF SHOULD BE PROPERLY MOISTURE CONDITIONED, PLACED IN HORIZONTAL LIFTS NO GREATER THAN 8 INCHES IN LOOSE THICKNESS, AND COMPACTED TO AT LEAST 90% RELATIVE COMPACTION. AFTER PLACEMENT OF LEF, PLACE NEW REINFORCED CONCRETE SLAB IN THE SAWCUT AREA. DOWEL THE NEW SLAB INTO THE EXISTING. SLAB THICKNESS AND REINFORCEMENT PER PLAN. REPLACE THE FLOOR COVERINGS.

2. CORRECT THE OUT-OF-PLUMB CONDITION OF THE FIREPLACE/CHIMNEYS UTILIZING UNDERPINNING METHODS. UNDERPINNING ELEMENTS MAY CONSIST OF HELICAL PILES, JACKED PIPE PILES, OR SIMILAR. THE DEPTH AND CAPACITY OF THE UNDERPINNING ELEMENTS WILL DEPEND ON THE TYPE, INSTALLATION DEPTHS, AND INSTALLATION METHODS. CONTRACTOR TO ENGAGE A FOUNDATATION REPAIR CONTRACTOR TO EVALUATE APPROPRIATE UNDERPINNING ELEMENT TYPES AND CAPACITIES. AFTER UNDERPINNING ELEMENTS ARE INSTALLED, THE FIREPLACE/CHIMNEYS CAN BE RE-LEVELED USING JACKS OR PRESSURE-GROUTING/MUDJACKING TECHNIQUES. PROTECT THE EXISTING ELEMENT FROM CRACKING AND DEFORMATIONS. CRACK REPAIR WILL BE THE RESPONSBILITY OF THE CONTRACTOR.

7 DETAIL — NOT TO SCALE

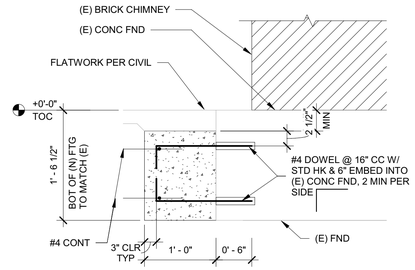

2 DETAIL — 1" = 1'-0"

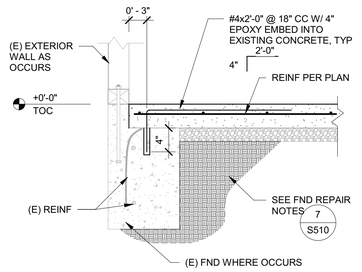

1 DETAIL — 1" = 1'-0"

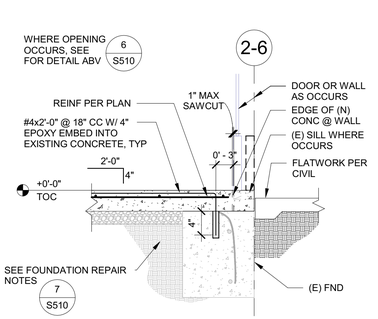

4 DETAIL — 1" = 1'-0"

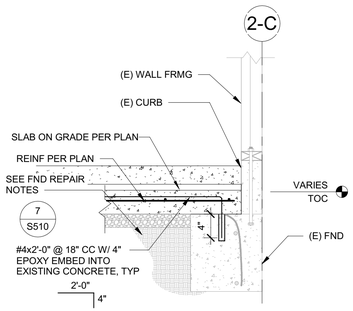

5 DETAIL — 1" = 1'-0"

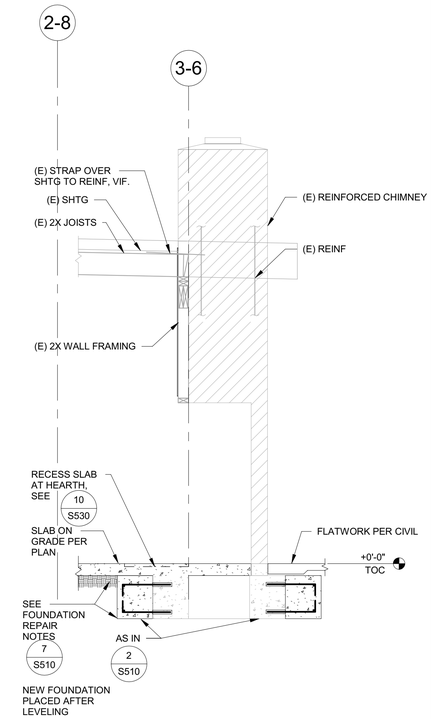

3 SECTION — 1/2" = 1'-0"

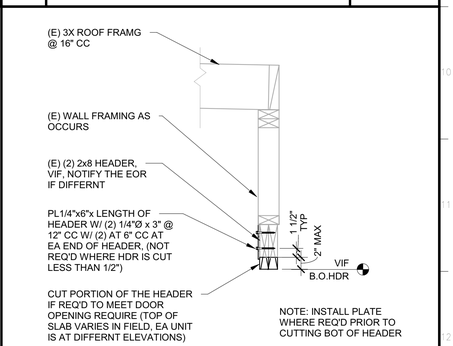

6 DETAIL — 1" = 1'-0"

THE SCOPE OF WORK INVOLVED IN THIS PROJECT IS EXEMPT FROM THE DIVISION OF THE STATE ARCHITECT ACCESSIBILITY REQUIREMENTS IN ACCORDANCE WITH TITLE 24, CALIFORNIA CODE OF REGULATIONS, 2016 CALIFORNIA BUILDING CODE.

OFFICE OF THE STATE FIRE MARSHAL
APPROVED FIRE AND PANIC ONLY
01/21/26
25-3084
Approval of this plan does not authorize or approve any omission or deviation from applicable regulations. Final approval is subject to field inspection. One set of approved plans shall be available on the project site at all times.

GENERAL SERVICES
Department of General Services
Architecture & Engineering Sections
State of California
Real Estate Services Division
Project Management & Development Branch
707 Third Street, Suite 4-105
West Sacramento, California 95605

REGISTERED PROFESSIONAL ENGINEER
GAURAV BALI
No. C-85737
CIVIL
STATE OF CALIFORNIA
8/27/2025

Issue		
No.	Date	Description
1	08/29/25	

Project
STAFF RESIDENCE REHABILITATION
26501 AVENUE 140
PORTERVILLE, CA 93257

DEVELOPMENTAL SERVICES

Supervisor	Designed	Drawn
JD	GB	GB

DSA App No.	SFM Permit No.
NA	25-S-3084-C-DR

Sheet Title
DETAILS

Project Number
000000000006803

Sheet Scale

Sheet Number
S510

Copyright © 2021, California Department of General Services - Real Estate Services Division

V2

ISSUE DATE: OCTOBER 28, 2026

X:\Projects\00xxxx\006803\RVT\STR\006803_STR_CENTRAL.rvt
8/27/2025 2:01:07 PM

RELATIVE BORDER SCALE IN INCHES

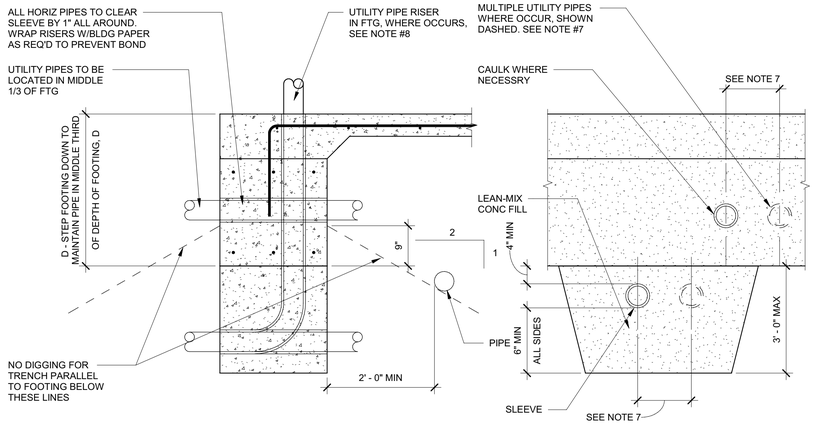

NOTES:
1. REINFORCING SHALL NOT BE INTERRUPTED, CUT OR DISPLACED BY PLACEMENT OF UTILITY PIPE.
2. 1500 PSI LEAN MIX CONCRETE FILL TO BE PLACED BEFORE FTG IS CAST. MAKE SAME WIDTH AS FTG AND FULL WIDTH OF PIPE TRENCH.
3. STEP FTG IF PIPE OCCURS IN LOWER THIRD OF ORIGINAL FOOTING DEPTH.
4. NO PIPES SHALL BE PLACED BELOW SPREAD FTGS OR WITHIN 2 TO 1 BEARING ZONE AROUND SPREAD FOOTING.
5. IF PIPE IS IN PLACE PRIOR TO CASTING CONCRETE, WRAP PIPE W/1" STYROFOAM INSULATION IN LIEU OF SLEEVE.
6. UTILITY PIPES ARE NOT ALLOWED PARALLEL IN FOOTING.
7. MULITPLE UTILITY PIPES (TWO OR MORE) MAY BE INSTALLED AS SHOWN, PROVIDED THEY ARE SPACED A MINIMUM 4 PIPES/CONDUIT DIAMETERS ON CENTER WITH A MINIMUM OF 3" OF CONCRETE BETWEEN.
8. UTILITY PIPES RISERS MAY OCCUR IN CONTINUOUS WALL FOOTINGS PROVIDED THEY ARE NO LARGER THAN (FOOTING WIDTH/6) AND OCCUR W/IN THE MIDDLE 1/2 OF THE FOOTING WIDTH. MULTIPLE RISERS MAY OCCUR IF SPACED AS NOTED ABOVE.
9. UTILITY PIPES PERPENDICULAR TO FOOTINGS AND MORE THAN 2'-0" BELOW BOTTOM OF FOOTINGS DOES NOT REQUIRE LEAN-MIX CONCRETE ENCASEMENT SUBJECT TO ACCEPTANCE OF THE SOILS ENGINEER.
10. CONDITIONS NOT CONFORMING TO THE PARAMETERS NOTED ABOVE SHALL BE REVIEWED ON A CASE-BY-CASE BASIS.

5 CONCRETE FOOTING AT UTILITY PIPES — 3/4" = 1'-0"

NOTES:
1. PROVIDE STD HOOK (12" MIN) AT ENDS OF ALL INTERIOR REBAR AT ENDS, CORNERS AND INTERSECTIONS - TYPICAL
2. PROVIDE ADDITIONAL VERTICAL BAR(S) AS SHOWN AT ALL CORNERS, INTERSECTIONS, AND ENDS MATCH VERTICAL REINFORCING.
3. SEE CONCRETE NOTES FOR ADDL REQUIREMENTS.

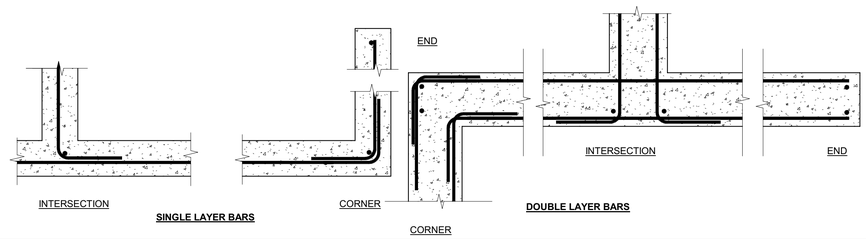

1 CORNER REINFORCING AT CONCRETE WALLS AND FOOTING — NOT TO SCALE

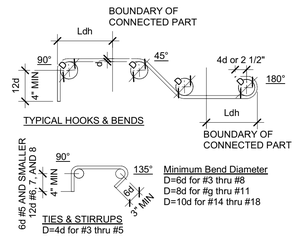

NOTES:
1. ALL HOOKS SHALL BE 90 ° STANDARD HOOKS UNLESS OTHERWISE SHOWN OR NOTED.
2. ALL REINF. SHALL BE BENT COLD, U.N.O.

REBAR HOOKED DEVELOPMENT LENGTH, Ldh

BAR SIZE	CONCRETE STRENGTH		
	f'c = 3000 PSI	f'c = 4000 PSI	f'c = 5000 PSI
#3	0'-8"	0'-7"	0'-6"
#4	0'-11"	0'-9"	0'-9"
#5	1'-2"	1'-0"	0'-11"
#6	1'-4"	1'-2"	1'-2"
#7	1'-7"	1'-5"	1'-3"
#8	1'-10"	1'-7"	1'-3"
#9	2'-1"	1'-9"	1'-7"
#10	2'-3"	2'-0"	1'-10"
#11	2'-6"	2'-2"	2'-0"

2 STANDARD REBAR HOOKS AND BENDS — NOT TO SCALE

THE SCOPE OF WORK INVOLVED IN THIS PROJECT IS EXEMPT FROM THE DIVISION OF THE STATE ARCHITECT ACCESSIBILITY REQUIREMENTS IN ACCORDANCE WITH TITLE 24, CALIFORNIA CODE OF REGULATIONS, 2016 CALIFORNIA BUILDING CODE.

OFFICE OF THE STATE FIRE MARSHAL
APPROVED FIRE AND PANIC ONLY
01/21/26
25-3084
Approval of this plan does not authorize or approve any omission or deviation from applicable regulations. Final approval is subject to field inspection. One set of approved plans shall be available on the project site at all times.

DEPRESSION 4" OR LESS

10 STEP IN SLAB ON GRADE — NOT TO SCALE

NOTE:
WHERE TRENCH CROSSES FOOTING, SEE

9 UTILITY TRENCH — 1" = 1'-0"

NOTES:
1. HSS STUD SHOW PERMITTED AT NON-BEARING PARTITIONS WITH 2 3/8" MAX HOLE DIA

6 HOLES IN STUDS — 1" = 1'-0"

NOTES:
1. CONSTRUCTION JOINTS AND CONTROL JOINTS SHALL DIVIDE SLAB INTO AREAS NOT EXCEEDING 225 SQ FT WITHOUT REENTRANT CORNERS AND WITH LENGTH TO WIDTH RATIOS NOT EXCEEDING 1 TO 1.
2. CONTRACTOR SHALL SUBMIT LAYOUT PLAN SHOWING PROPOSED CONTROL AND CONSTRUCTION JOINT LOCATION.
3. JOINT SPACING SHALL NOT EXCEED 15 FEET IN EITHER DIRECTION. SEMIRIGID SEALANT PER SPECIFICATIONS.
4. CONSTRUCTION JOINTS MAY BE USED IN LIEU OF CONTROL JOINTS AT CONTRACTOR'S OPTION.

3 SLAB ON GRADE JOINTS — NOT TO SCALE

NOTES:
1. NOTCH MAY OCCUR AT TOP OR BOTTOM, BUT NOT BOTH.
2. D IS THE DEPTH OF THE JOIST OR BEAM.
3. S IS THE CLEAR SPAN OF JOIST OR BEAM.
4. WITH NO BOTTOM NOTCH AT SUPPORT, DIMENSIONS ARE MEASURED TO END OF JOIST.
5. PREDRILL CORNERS OF NOTCHES.
6. NO NOTCHES PERMITTED IN MIDDLE THIRD OF SPAN.

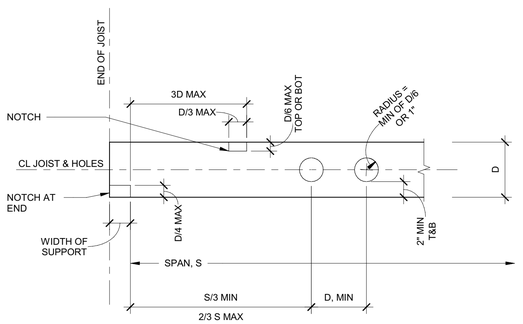

8 HOLES AND NOTCHES IN JOISTS AND BEAMS — 1" = 1'-0"

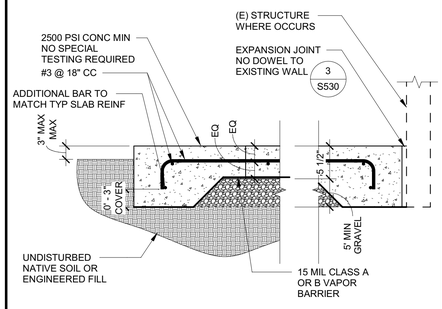

7 MECH PAD SLAB — 1" = 1'-0"

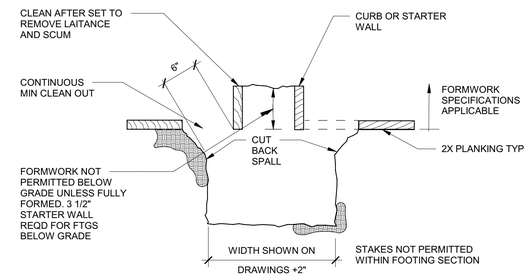

4 MANDATORY MINIMUM FORMWORK — NOT TO SCALE

DGS GENERAL SERVICES
Department of General Services
Architecture & Engineering Sections
State of California
Real Estate Services Division
Project Management & Development Branch
707 Third Street, Suite 4-105
West Sacramento, California 95605

REGISTERED PROFESSIONAL ENGINEER GAURAV BALI No. C-85737 CIVIL STATE OF CALIFORNIA
8/27/2025

Issue		
No.	Date	Description
1	08/29/25	

Project
STAFF RESIDENCE REHABILITATION
26501 AVENUE 140
PORTERVILLE, CA 93257

DEVELOPMENTAL SERVICES

Supervisor	Designed	Drawn
JD	GB	GB

DSA App No.	SFM Permit No.
NA	25-S-3084-C-DR

Sheet Title
TYPICAL DETAILS

Project Number
000000000006803

Sheet Scale

Sheet Number
S530

Copyright © 2021, California Department of General Services: Real Estate Services Division

V2

ISSUE DATE: OCTOBER 28, 2026

X:\Projects\00xxxx\006803\RVT\STR\006803_STR_CENTRAL.rvt
8/27/2025 2:01:09 PM

RELATIVE BORDER SCALE IN INCHES

SYMBOLS LEGEND

SYMBOL	ABBREVIATION	DESCRIPTION
	---	3 WAY MODULATING CONTROL VALVE
	---	3 WAY TWO POSITION CONTROL VALVE
	---	3 WAY VALVE
	---	ANCHOR
	---	ANGLE GLOBE VALVE
	AVN	ANGLE VALVE
	AQ	AQUASTAT
	AD	AREA DRAIN
	---	AUTOMATIC AIR VENT
	---	AUTOMATIC FLOW CONTROL
	BFP, BP, DCW	BACKFLOW PREVENTER, REDUCE PRESSURE, DOUBLE CHECKVALVE
	---	BALANCING VALVE
	---	BALL JOINT
	---	BALL VALVE
	---	BOTTOM CONNECTION
	---	BUTTERFLY VALVE
BPT	BPT	BYPASS TIMER
	CBV	CALIBRATED BALANCE VALVE
	CB, RD	CATCH BASIN, ROOF DRAIN
	---	CHECK VALVE
	---	CIRCUIT SETTER VALVE
	CP	CIRCULATING PUMP
	CO	CLEANOUT
DS	DS	DYNAMIC SENSOR
	---	ECCENTRIC REDUCER
	EJ	EXPANSION JOINT
F	FD	FIRE DAMPER
	FDC	FIRE DEPARTMENT CONNECTION
	FHC	FIRE HOSE RACK AND CABINET
	FH	FIRE HYDRANT
FS	FS	FIRE/SMOKE DAMPER
	---	FLEXIBLE CONNECTOR
	---	FLOAT & THERMOSTATIC TRAP
	FD	FLOOR DRAIN
	FS	FLOOR SINK
	---	FLOW ARROW
FE	---	FLOW ELEMENT
	FLV	FLOW LIMITING VALVE
FS	FS	FLOW SWITCH
	GCK	GAGE COCK

SYMBOLS LEGEND

SYMBOL	ABBREVIATION	DESCRIPTION
	GSCK, PC	GAS COCK, PLUG COCK
	GM	GAS METER
	GPR	GAS PRESSURE REGULATOR
	---	GATE VALVE WITH HOSE ADAPTER
	---	GATE VALVE
	---	GLOBE VALVE
	HD	HOPPER DRAIN
	HB	HOSE BIBB
	HB	HOSE BIBB
H X	H	HUMIDISTAT
	---	INVERTED BUCKET TRAP
	---	LIMIT OF DEMOLITION
	---	MANUAL AIR VENT
	---	MODULATING CONTROL VALVE
	---	PIPE BREAK
	---	PIPE CAP
	---	PIPE DOWN
	---	PIPE GUIDE
	---	PIPE UP
	---	POINT OF CONNECTION
	PIV	POST INDICATOR VALVE
	PRV	PRESSURE REGULATING VALVE
	---	PRESSURE RELIEF VALVE
	---	REDUCER
SD	SD	SMOKE DAMPER
SD	SKD	SMOKE DETECTOR
	---	SOLENOID VALVE
	---	STRAINER
S X	S	SWITCH
	---	TEST PLUG
	---	THERMOMETER
T X	T	THERMOSTAT
	TP	TRAP PRIMER
	---	TWO POSITION CONTROL VALVE
	---	UNION
	---	VALVE IN RISER/DROP
	VB	VALVE IN VALVE BOX
	---	WALL CLEANOUT
	WHA	WATER HAMMER ARRESTOR
WM	WM	WATER METER

MECHANICAL GENERAL NOTES

1. ALL WORK SHALL COMPLY WITH ALL APPLICABLE CODES, SPECIFICATIONS, LOCAL ORDINANCES, AND INDUSTRY STANDARDS.
2. VERIFY EXACT LOCATION OF ALL (E) EQUIPMENT, DUCTWORK, DIFFUSERS, REGISTERS, AND GRILLES. NOTIFY STATE IMMEDIATELY OF ANY DISCREPANCIES BETWEEN (E) SYSTEMS AND DRAWINGS.
3. COORDINATE EXACT LOCATION OF EQUIPMENT AND ALL PENETRATIONS THROUGH ROOF, FLOORS, AND WALLS WITH ARCHITECTURAL STRUCTURAL SYSTEMS PRIOR TO COMMENCING WORK.
4. COORDINATE EXACT SIZE AND ROUTING OF DUCTWORK WITH ARCHITECTURAL PLANS, STRUCTURE, AND EQUIPMENT PRIOR TO COMMENCING WORK.
5. ALL DUCTWORK, CEILING DIFFUSERS/REGISTERS/GRILLES, EQUIPMENT, PIPING, ETC. ARE NEW U.O.N. (SHOWN HEAVY). (E) DUCTWORK, PIPING, ETC. IS SHOWN LIGHT. SEE LEGEND.

THE SCOPE OF WORK INVOLVED IN THIS PROJECT IS EXEMPT FROM THE DIVISION OF THE STATE ARCHITECT ACCESSIBILITY REQUIREMENTS IN ACCORDANCE WITH TITLE 24, CALIFORNIA CODE OF REGULATIONS, 2016 CALIFORNIA BUILDING CODE.

OFFICE OF THE STATE FIRE MARSHAL
APPROVED FIRE AND PANIC ONLY
01/21/26
25-3084
Approval of this plan does not authorize or approve any omission or deviation from applicable regulations. Final approval is subject to field inspection. One set of approved plans shall be available on the project site at all times.

DGS GENERAL SERVICES

Department of General Services
Architecture & Engineering Sections
State of California
Real Estate Services Division
Project Management & Development Branch
707 Third Street, Suite 4-105
West Sacramento, California 95605

REGISTERED PROFESSIONAL ENGINEER
KEVIN D. STTLER
M 33498
EXPIRES 9/30/26
MECHANICAL
STATE OF CALIFORNIA

DATE SIGNED: 12/13/24

Issue

No.	Date	Description

Project
STAFF RESIDENCES REHABILITATION

PORTERVILLE, CA 93257

DEVELOPMENTAL SERVICES

Supervisor	Designed	Drawn
KS	JD/JH	JD/JH

DSA App No.	SFM Permit No.
N/A	25-S-3084-C-DR

Sheet Title
HVAC LEGENDS & NOTES

Project Number
000000000006803

Sheet Scale

Sheet Number
M001

capital engineering
RANCHO CORDOVA, CALIFORNIA
JD - JH — PM - DESIGN TEAM
200502.00 — PROJECT NO.

Copyright © 2021, California Department of General Services: Real Estate Services Division

V2

ISSUE DATE: OCTOBER 28, 2026

RELATIVE BORDER SCALE IN INCHES 0 1 2

8/27/2025 10:10:00 AM
C:\Users\all\OneDrive - Capitalofficedocuments\200502.00_Porterville_Staff_Residences_MP22_Central_AllenKurvi

HVAC ABBREVIATIONS

SYMBOL	DESCRIPTION
ABC	ABOVE CEILING
ABV	ABOVE
ACC DR	ACCESS DOOR
ACC P	ACCESS PANEL
ACU	AIR CONDITIONING UNIT
AFF	ABOVE FINISHED FLOOR
AHU	AIR HANDLING UNIT
APD	AIR PRESSURE DROP, INCHES WATER COLUMN
APPROX	APPROXIMATE
ARCH	ARCHITECTURAL
ATTEN	ATTENUATORS
ATV	ACOUSTIC TURNING VANE
BD	BALANCE DAMPER
BDD	BACK DRAFT DAMPER
BHP	BRAKE HORSE POWER
BLDG	BUILDING
BOD	BOTTOM OF DUCT
BOR	BOTTOM OF REGISTER
BTUH	BRITISH THERMAL UNITS PER HOUR
CAP	CAPACITY
CD	CONDENSATE DRAIN
CEF	CEILING EXHAUST FAN
CFH	CUBIC FEET OF GAS PER HOUR
CFM	CUBIC FEET OF AIR FLOW PER MINUTE
CHV	CHECK VALVE
CLG	CEILING
CLR	CLEAR
CONC	CONCRETE
COND	CONDENSER
CONN	CONNECT/CONNECTION
CONT	CONTINUATION
CONTR	CONTRACTOR
D	DAMPER
DGP	DATA GATHERING PANEL
DIA	DIAMETER
DL	DOOR LOUVER
DN	DOWN
DSP	DRY STAND PIPE
DTR	DOWN THROUGH ROOF
DWG	DRAWING
EA	EXHAUST AIR
EAD	EXHAUST AIR DAMPER
EC	EVAPORATIVE COOLER
EDB	ENTERING DRY BULB
EER	ENERGY EFFICIENCY RATING
EF	EXHAUST FAN
EL	ELEVATION
ELEC	ELECTRIC/ELECTRICAL
ENT	ENTERING
EQUIP	EQUIPMENT
ESP	EXTERNAL STATIC PRESSURE
EVAP	EVAPORATOR
EW	ENTERING WATER
EWB	ENTERING WET BULB
EWC	ELECTRIC WATER COOLER
EWT	ENTERING WATER TEMPERATURE
EXH	EXHAUST
f	CUBIC FEET OF AIR FLOW PER MINUTE
F	DEGREES FAHRENHEIT
FA	FROM ABOVE
FB	FROM BELOW
FC	FLEXIBLE CONNECTION
FCV	FLOW CONTROL VALVE
FD	FIRE DAMPER
FF	FLY FAN
FIN	FINISH
FLA	FULL LOAD AMPS
FLR	FLOOR
FPM	FEET PER MINUTE
FSD	FIRE AND SMOKE DAMPER
FT (')	FOOT OR FEET
FT ^{2}	SQUARE FEET
GA	GAUGE
GALV	GALVANIZED
GI	GALVANIZED IRON
GPH	GALLONS PER HOUR
GPM	GALLONS PER MINUTE
HP	HORSE POWER
HPS	HIGH PRESSURE STEAM
HTG	HEATING
HV	HAND VALVE
HW	HOT WATER
HWR	HOT WATER RETURN
HWS	HOT WATER SUPPLY

SYMBOL	DESCRIPTION
IE	INVERT ELEVATION
IN, (")	INCH
IN ^{2}	SQUARE INCHES
KEF	KITCHEN EXHAUST FAN
KW	KILOWATTS
LAV	LAVATORY
LBS	POUNDS
LD	LOUVERED DOOR
LDB	LEAVING DRY BULB
LPS	LOW PRESSURE STEAM
LRA	LOCKED ROTOR AMPS
LTCP	LOCAL TEMPERATURE CONTROL PANEL
LVR	LOUVER
LWB	LEAVING WET BULB
MAT	MIXED AIR TEMPERATURE
MAU	MAKE-UP AIR UNIT
MAV	MANUAL AIR VENT
MAX	MAXIMUM
MBH	THOUSAND BTUs PER HOUR
MCC	MOTOR CONTROL CENTER
MD	MOTORIZED
MECH	MECHANICAL
MFR	MANUFACTURER
MIN	MINIMUM
OA	OUTSIDE AIR
OAD	OUTSIDE AIR DAMPER
OC	ON CENTER
OD	OUTSIDE DIAMETER
OH	OVERHEAD
OV	OUTLET VELOCITY
PCR	PUMPED CONDENSATE RETURN
PD	PRESSURE DROP
PRV	PRESSURE REDUCING VALVE/ PRESSURE REGULATING VALVE
PSI (G) (A)	POUNDS PER SQUARE INCH (GAUGE) (ABSOLUTE)
RA	RETURN AIR
RAD	RETURN AIR DAMPER
REF	ROOF EXHAUST FAN
RF	RETURN FAN
RPM	REVOLUTIONS PER MINUTE
RV	RELIEF VENTILATOR
S & R	SUPPLY AND RETURN
SA	SUPPLY AIR
SAD	SEE ARCHITECTURAL DRAWINGS
SB	SECURITY BARS
SD	SPLITTER DAMPER
SF	SUPPLY FAN
SG	STEAM GENERATOR
SK	SINK
SM	SHEET METAL
SOV	SHUT OFF VALVE
SP	STATIC PRESSURE
SPD	STATIC PRESSURE DROP
SQ FT	SQUARE FEET
SQ IN	SQUARE INCHES
SS	STAINLESS STEEL
STR	STRAINER
STRUC	STRUCTURAL
TA	TO ABOVE
TB	TO BELOW
T.C.C.	TEMPERATURE CONTROL CONTRACTOR
TCP	TEMPERATURE CONTROL PANEL
TCV	TEMPERATURE CONTROL VALVE
TEMP	TEMPERATURE
TFH	THERMAL FLUID HEATER
THK	THICK
TP	TOTAL PRESSURE
TSP	TOTAL STATIC PRESSURE
TYP	TYPICAL
UCD	UNDERCUT DOOR
UF	UNDERFLOOR
UG	UNDERGROUND
UON	UNLESS OTHERWISE NOTED
UTR	UP THROUGH ROOF
V (VTR)	VENT (VENT THROUGH ROOF)
VD	VOLUME DAMPER
VLV	VALVE
VSD	VARIABLE SPEED DRIVE
VV	VARIABLE AIR VOLUME CONTROLLER
VVRH	VARIABLE AIR VOLUME CONTROLLER WITH REHEAT COIL
WALL MTD (R)	WALL MOUNTED (RECESSED)
WB	WET BULB
WC	WATER CLOSET
WMS	WIRE MESH SCREEN
WP	WORKING PRESSURE
WPD	WATER PRESSURE DROP FEET OF WATER COLUMN
WT	WEIGHT

THE SCOPE OF WORK INVOLVED IN THIS PROJECT IS EXEMPT FROM THE DIVISION OF THE STATE ARCHITECT ACCESSIBILITY REQUIREMENTS IN ACCORDANCE WITH TITLE 24, CALIFORNIA CODE OF REGULATIONS, 2016 CALIFORNIA BUILDING CODE.

OFFICE OF THE STATE FIRE MARSHAL
APPROVED FIRE AND PANIC ONLY
01/21/26
25-3084
Approval of this plan does not authorize or approve any omission or deviation from applicable regulations. Final approval is subject to field inspection. One set of approved plans shall be available on the project site at all times.

GENERAL SERVICES
Department of General Services
Architecture & Engineering Sections
State of California
Real Estate Services Division
Project Management & Development Branch
707 Third Street, Suite 4-105
West Sacramento, California 95605

REGISTERED PROFESSIONAL ENGINEER
KEVIN D. STTLER
M 33498
EXPIRES 9/30/26
MECHANICAL
STATE OF CALIFORNIA

DATE SIGNED: 12/13/24

Issue		
No.	Date	Description

Project
STAFF RESIDENCES REHABILITATION
PORTERVILLE, CA 93257
DEVELOPMENTAL SERVICES

Supervisor	Designed	Drawn
Approver	Designer	Author

DSA App No.	SFM Permit No.
N/A	25-S-3084-C-DR

Sheet Title
HVAC LEGENDS & NOTES

Project Number
000000000006803

Sheet Scale

Sheet Number
M002

capital engineering
Rancho Cordova, California
JD - JH — PM - DESIGN TEAM
200502.00 — PROJECT NO.

Copyright © 2021, California Department of General Services: Real Estate Services Division

V2

ISSUE DATE: OCTOBER 28, 2026

8/27/2025 10:10:00 AM C:\Users\all\OneDrive - Capital\Documents\200502.00_Porterville_Staff_Residences_MP22_Central_AlexKu.rvt

RELATIVE BORDER SCALE IN INCHES

VARIABLE REFRIGERANT FLOW SPLIT SYSTEM EQUIPMENT SCHEDULE

UNIT	INDOOR UNIT LOCATION	"DAIKIN" MODEL NO. (INDOOR UNIT)	UNIT FORM FACTOR	DESIGN SA (CFM)	DUCTED OA (CFM)	SENSIBLE COOLING CAPACITY (BTUH)	TOTAL COOLING CAPACITY (BTUH)	HEATING CAPACITY (BTUH)	ESP in-H2O	MCA (A)	MOP (A)	VOLT/PH/Hz	REF. PIPING RL	REF. PIPING RS	OPER. WT. (LBS.)	MOUNTING DETAIL
VRF-HP 2B-1	2 BEDROOM BLDG 104 MECH CLOSET	FXTQ-30TAVJUA	AIR HANDLING UNIT	1,000	45	21,400	30,000	34,000	0.9"	4.90	15	208/230V 1PH - 60 Hz	3/8	5/8	140	2 M500
VRF-HP 2B-2	2 BEDROOM BLDG 104 KITCHEN	FXAQ-12PVJU	WALL MOUNTED	290	-	8,900	12,000	13,500	-	0.40	-	208/230V 1PH - 60 Hz	1/4	1/2	30	3 M500

UNIT	OUTDOOR UNIT LOCATION	"DAIKIN" MODEL NO. (OUTDOOR UNIT)	COOLING CAPACITY (BTUH)	HEATING CAPACITY (BTUH)	VOLT/PH/Hz	MCA	MOP	RLA	REF. PIPING RL	REF. PIPING RS	SEER	HSPF	OPER. WT. (LBS.)	MOUNTING DETAIL
VRF-O 2B-1	2 BEDROOM BLDG 104 BACKYARD	RXTQ-36TAVJ9	34,200	37,000	208/230V 1PH / 60 Hz	16.5	25	15.3	3/8	5/8	17	9.7	210	1 M500

NOTES:

1. PROVIDE WITH 2" MERV 13 FILTERS.
2. UNITS USE R32 REFRIGERANT
3. AT EACH VRF-HP UNIT WHERE GRAVITY DRAINAGE IS NOT AVAILABLE, PROVIDE CONDENSATE PUMP "HARTELL" MODEL NO. AZ-X-1965-DV, 120V/1 PH/60Hz 3.5AMP, 1/10 HP, WITH 12 FEET HEAD @ 140 GPH.
3. PROVIDE WITH DAIKIN 'BRC1E71' THERMOSTAT. SEE 1/M600 FOR CONTROL DIAGRAM.

FAN SCHEDULE

UNIT	LOCATION	"MFR" MODEL NO.	CFM HIGH/LOW	ESP (IN. W.G.)	DUTY	STYLE	RPM	MOTOR W	MOTOR FLA	VOLT/PH	OPER. WT. (LBS.)	MOUNTING DETAIL	CONTROL DIAGRAM	NOTES
CEF 1	RESTROOMS	"PANASONIC" FV-0511VK3	100/60	0.25	E	CE	892/906	10.5/7.4	0.18/0.13	115V / 1PH	10	4 M500	2 M600	1
EF 1	KITCHEN	"GREENHECK" SQ-60-VG	55	0.25	E	IF	1,371	7.5	1.3	115V / 1PH	27	7 M500	2 M600	1

LEGEND

DUTY: S-SUPPLY, R-RETURN, E-EXHAUST, DS-DESTRATIFICATION

STYLE: AF-AIRFOIL, CA- CABINET, VS-VENT SET, RE-ROOF EXHAUST, CE-CEILING, PR-PROPELLOR, IF-INLINE

NOTES:

1. LOW SPEED IS TO RUN CONTINUOUSLY IN CONFORMANCE WITH ASHRAE 62.2.

DIFFUSER, REGISTER & GRILLE SCHEDULE

SYMBOL	DESCRIPTION	TITUS	TUTTLE & BAILEY	ANEMOSTAT	KRUEGER
CD	ROUND CEILING DIFFUSER, SURFACE MOUNT	TMR	-	-	-
CR & CE	CEILING RETURN AND EXHAUST WITH 1/2" EGG CRATE CORE SURFACE MOUNT	MODEL 50 F BORDER TYPE 1	CRE-507	GC-5	EGC-5
S	DOUBLE DEFLECTION SUPPLY GRILLE WITH HORIZONTAL FRONT BARS, 3/4" SPACING	300 RL	T 64	S2V	880 V
R & E	RETURN OR EXHAUST GRILLE WITH 35° OR 45° HORIZONTAL BARS.	350 RL	T 77D	S3HD	S 80 H

NOTES:

1. PROVIDE WITH MANUFACTURER'S OPPOSED BLADE, OR SLIDING BLADE DAMPER ACCESSORY, FOR BALANCING.
2. FURNISH ALL PRODUCTS OF A SINGLE MANUFACTURER.

THE SCOPE OF WORK INVOLVED IN THIS PROJECT IS EXEMPT FROM THE DIVISION OF THE STATE ARCHITECT ACCESSIBILITY REQUIREMENTS IN ACCORDANCE WITH TITLE 24, CALIFORNIA CODE OF REGULATIONS, 2016 CALIFORNIA BUILDING CODE.

OFFICE OF THE STATE FIRE MARSHAL
APPROVED FIRE AND PANIC ONLY

01/21/26
25-3084

Approval of this plan does not authorize or approve any omission or deviation from applicable regulations. Final approval is subject to field inspection. One set of approved plans shall be available on the project site at all times.

DGS GENERAL SERVICES

Department of General Services
Architecture & Engineering Sections
State of California
Real Estate Services Division
Project Management & Development Branch

707 Third Street, Suite 4-105
West Sacramento, California 95605

REGISTERED PROFESSIONAL ENGINEER
KEVIN D. STTLER
M 33498
EXPIRES 9/30/26
MECHANICAL
STATE OF CALIFORNIA

DATE SIGNED: 12/13/24

Issue

No.	Date	Description

Project

STAFF RESIDENCES REHABILITATION

PORTERVILLE, CA 93257

DEVELOPMENTAL SERVICES

Supervisor	Designed	Drawn
Approver	Designer	Author

DSA App No.	SFM Permit No.
N/A	25-S-3084-C-DR

Sheet Title

HVAC SCHEDULES

Project Number

000000000006803

Sheet Scale

Sheet Number

M003

capital engineering
RANCHO CORDOVA, CALIFORNIA
JD - JH PM - DESIGN TEAM
200502.00 PROJECT NO.

Copyright © 2021, California Department of General Services: Real Estate Services Division

V2

ISSUE DATE: OCTOBER 28, 2026

24 x 36
C:\Users\all\OneDrive - Capital\Documents\200502.00_Porterville_Staff_Residences_MP22_Central_Alex\Central_Alex.rvt
8/27/2025 10:10:00 AM

RELATIVE BORDER SCALE IN INCHES

CALIFORNIA ENERGY COMMISSION

ALTERATIONS TO SPACE CONDITIONING SYSTEMS (FORMERLY CF-1R-ALT-HVAC)

CF1R-ALT-02-E

CERTIFICATE OF COMPLIANCE

Project Name:	Staff Residences Rehabilitation	**Enforcement Agency:**	Porterville, City of
Dwelling Address:	26501 Ave 140	**Permit Number:**	20-S-2687-C-NW
City and Zip Code	Porterville, 93257	**Permit Application Date:**	2024-11-22

A. General Information
CF1R-ALT-02 is applicable to multiple space conditioning systems contained within a single dwelling unit.

01	**Project Name**	Staff Residences Rehabilitation	**02**	**Date Prepared**	2024-12-13
03	**Project Location**	26501 Ave 140	**04**	**Building Type**	Single family
05	**CA City**	Porterville	**06**	**Dwelling Unit Name**	Staff Residences Rehabilitation
07	**Zip Code**	93257	**08**	**Dwelling Unit Conditioned Floor Area (ft^2)**	1086
09	**Climate Zone**	13	**10**	**Number of Space Conditioning (SC) Systems in this Dwelling Unit:**	1

B. Space Conditioning (SC) System Information

01	02	03	04	05	06	07	08	09	10
SC System ID or Name	SC System Location or Area Served	CFA served by this SC System (ft^2)	Is the SC system a ducted system?	Installing a refrigerant containing component?	Installing new SC system components?	Installing more than 25 feet of ducts?	Installing entirely new duct system?	Installing entirely new SC system?	Alteration Type
VRF-O	Bldg 104	1086	Yes	Yes	Yes	No	No	No	Altered space conditioning system

CALIFORNIA ENERGY COMMISSION

ALTERATIONS TO SPACE CONDITIONING SYSTEMS (FORMERLY CF-1R-ALT-HVAC)

CF1R-ALT-02-E

C. Extension of Existing Duct System, Greater Than 25 Feet (Section150.2(b)1Diib)

This section does not apply to this project.

D. Altered Space Conditioning System (Sections 150.2(b)1E and F)

01	02	03	04	05	06	07	08	09	010	11	12	13	14
System ID/ Name	**SC System Description of Area Served**	**Heating System Type**	**Altered Heating Components**	**Heating Efficiency Type**	**Heating Minimum Efficiency Value**	**Cooling System Type**	**Altered Cooling Components**	**Cooling Efficiency Type**	**Cooling Minimum Efficiency Value SEER/SEER2**	**Cooling Minimum Efficiency Value EER/EER2/CEER**	**Required Thermostat Type**	**New or Replaced Duct Length**	**New Duct R-Value**
VRF-O	Bldg 104	Multi-split HP-ducted+duct less	All new heating components	HSPF	8.4	Multi-split HP-ducted+duct less	All new cooling components	EERSEER	14.4	11.7	Setback	Less than or equal to 25 feet	R-8

Required Documentation:
CF2R-MCH-01-E - Space Conditioning Systems
- Duct insulation requirement for the new portions of supply-air and return-air ducts or plenums: R6 (CZ 3, 5-7) and R8 (CZ 1, 2, 4, 8-16)

CF2R and CF3R-MCH-20-H - Duct Leakage Test required when heating or cooling components are installed in ducted systems, or when more than 25 ft of duct length is replaced
-Leakage rate compliance: less than or equal to 10% or less than or equal to 7% leakage to outside, or seal all accessible leaks.

CF2R and CF3R-MCH-25-H Refrigerant Charge verification required when refrigerant containing components are installed or altered (applicable in CZ 2, 8-15).
CF2R and CF3R-MCH-23 Airflow Rate greater than or equal to 300 CFM per ton required when MCH-25 is required.

Exceptions:
- Duct systems registered with HERS provider as previously sealed are exempt from MCH-20 Duct Leakage Testing requirements.
- Heating-only systems and Air Handler Furnace changes do not require verification of Air Flow MCH-23, or Refrigerant Charge MCH-25.
-Existing duct systems constructed, insulated or sealed with asbestos are exempt from MCH-20 Duct Leakage Testing requirements.

E. Entirely New or Complete Replacement Duct System, with or without Equipment Changeout (Sections 150.2(b)1Diia and 150.2(b)1E, F)

This section does not apply to this project.

F. Entirely New or Complete Replacement Space Conditioning System (Section 150.2(b)1C)

This section does not apply to this project.

CALIFORNIA ENERGY COMMISSION

ALTERATIONS TO SPACE CONDITIONING SYSTEMS (FORMERLY CF-1R-ALT-HVAC)

CF1R-ALT-02-E

DOCUMENTATION AUTHOR'S DECLARATION STATEMENT

I, I certify that this Certificate of Compliance documentation is accurate and complete.

Documentation Author Name: David Yasinskiy	Documentation Author Signature:
Company: Capital Engineering Consultants, Inc.	Signature Date: 2024-12-13
Address: 11020 Sun Center Dr	CEA/ HERS Certification Identification (if applicable):
City/State/Zip: Rancho Cordova CA 95670	Phone: (916) 851-3500

RESPONSIBLE PERSON'S DECLARATION STATEMENT

I certify the following under penalty of perjury, under the laws of the State of California:

1. The information provided on this Certificate of Compliance is true and correct.
2. I am eligible under Division 3 of the Business and Professions Code to accept responsibility for the building design or system design identified on this Certificate of Compliance (responsible designer).
3. The energy features and performance specifications, materials, components, and manufactured devices for the building design or system design identified on this Certificate of Compliance conform to the requirements of Title 24, Part 1 and Part 6 of the California Code of Regulations.
4. The building design features or system design features identified on this Certificate of Compliance are consistent with the information provided on other applicable compliance documents, worksheets, calculations, plans and specifications submitted to the enforcement agency for approval with this building permit application.
5. I understand that a registered copy of this Certificate of Compliance shall be made available with the building permit(s) issued for the building, and made available to the enforcement agency for all applicable inspections, and I will take the necessary steps to accomplish this requirement.
6. I understand that a registered copy of this Certificate of Compliance is required to be included with the documentation the builder provides to the building owner at occupancy, and I will take the necessary steps to accomplish these requirements.

Responsible Designer Name: Kevin Stillman	Responsible Designer Signature:
Company : Capital Engineering Consultants, Inc.	Date Signed: 2024-12-13
Address: 11020 Sun Center Dr	License: M 33498
City/State/Zip: Rancho Cordova CA 95670	Phone: (916) 851-3500

Digitally signed by California Home Energy Efficiency Rating Services (CHEERS). This digital signature is provided in order to secure the content of this registered document, and in no way implies Registration Provider responsibility for the accuracy of the information.

THE SCOPE OF WORK INVOLVED IN THIS PROJECT IS EXEMPT FROM THE DIVISION OF THE STATE ARCHITECT ACCESSIBILITY REQUIREMENTS IN ACCORDANCE WITH TITLE 24, CALIFORNIA CODE OF REGULATIONS, 2016 CALIFORNIA BUILDING CODE.

OFFICE OF THE STATE FIRE MARSHAL APPROVED FIRE AND PANIC ONLY

01/21/26
25-3084
VINCE T. DIAS

Approval of this plan does not authorize or approve any omission or deviation from applicable regulations. Final approval is subject to field inspection. One set of approved plans shall be available on the project site at all times.

GENERAL SERVICES

Department of General Services
Architecture & Engineering Sections
State of California
Real Estate Services Division
Project Management & Development Branch

707 Third Street, Suite 4-105
West Sacramento, California 95605

REGISTERED PROFESSIONAL ENGINEER
KEVIN D. STILLMAN
M 33498
EXPIRES 9/30/26
MECHANICAL
STATE OF CALIFORNIA

DATE SIGNED: 12/13/24

Issue

No.	Date	Description

Project
STAFF RESIDENCES REHABILITATION

PORTERVILLE, CA 93257

DEVELOPMENTAL SERVICES

Supervisor	Designed	Drawn
Approver	Designer	Author

DSA App No.	SFM Permit No.
N/A	25-S-3084-C-DR

Sheet Title
TITLE 24 COMPLIANCE DOCUMENTS

Project Number
000000000006803

Sheet Scale

Sheet Number
M004

capital engineering
RANCHO CORDOVA, CALIFORNIA
JD - JH PM - DESIGN TEAM
200502.00 PROJECT NO.

Copyright © 2021, California Department of General Services: Real Estate Services Division

V2

ISSUE DATE: OCTOBER 28, 2026

RELATIVE BORDER SCALE IN INCHES 0 1 2 3

8/27/2025 10:10:02 AM C:\Users\all\OneDrive - CapitalDocuments\200502.00_Porterville_Staff_Residences_MP22_Central_Alex\Cf1r-alt-02-e.rvt

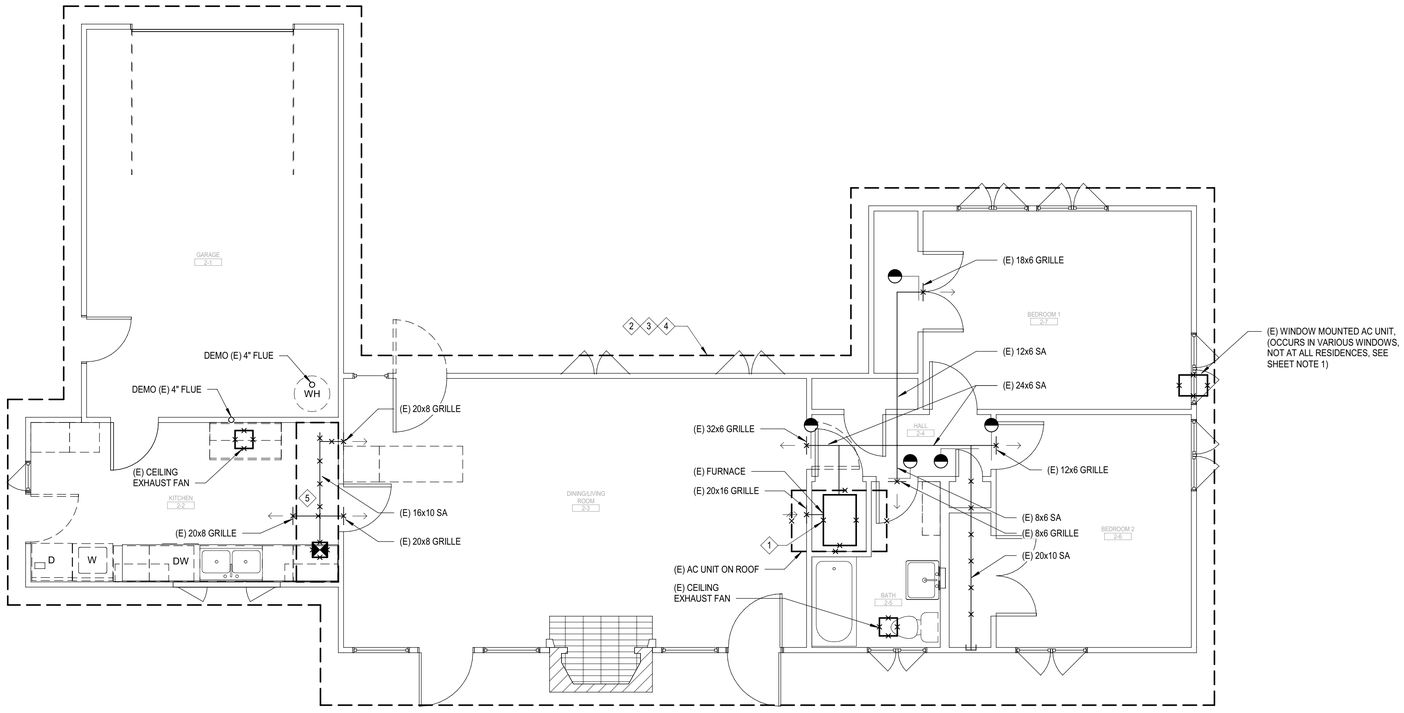

SHEET NOTES:

1. CONTRACTOR SHALL FIELD VERIFY, WITH BID WALK, PARTICULAR CONDITIONS AT BUILDING 104 UNIT TO CONFIRM SCOPE, AND DEMOLISH ACCORDINGLY.
2. EXISTING DUCT ROUTING AND LOCATIONS HAVE BEEN APPROXIMATED BASED ON AVAILABLE EXISTING DRAWINGS. CONTRACTOR SHALL VERIFY EXACT LOCATION AND ROUTING IN FIELD.

KEYNOTES:

1. DEMOLISH (E) INDOOR FURNACE UNIT. PROTECT (E) DUCT AND PREPARE FOR CONNECTION TO NEW UNIT. DISTRIBUTION DUCT SERVING THE LIVING ROOM, BEDROOMS, AND BATHROOM IS TO REMAIN.
2. DEMOLISH ALL (E) HVAC EQUIPMENT (INCLUDING ANY ROOFTOP AC UNITS, EVAPORATIVE COOLING UNITS, WINDOW MOUNTED AC UNITS, AND EXHAUST FANS), AND ALL ASSOCIATED PIPING AND APPURTENANCES.
3. DEMOLISH ALL (E) CEILING DIFFUSERS AND WALL GRILLES. PREPARE (E) DUCT BRANCHES FOR CONNECTION TO NEW GRILLES.
4. DEMOLISH ALL (E) DUCT ON ROOF, AND ALL (E) DUCT DISTRIBUTION SERVING KITCHEN.
5. DEMOLISH (E) DUCT DISTRIBUTION AND (E) GRILLES IN (E) SOFFIT.

THE SCOPE OF WORK INVOLVED IN THIS PROJECT IS EXEMPT FROM THE DIVISION OF THE STATE ARCHITECT ACCESSIBILITY REQUIREMENTS IN ACCORDANCE WITH TITLE 24, CALIFORNIA CODE OF REGULATIONS, 2016 CALIFORNIA BUILDING CODE.

OFFICE OF THE STATE FIRE MARSHAL
APPROVED FIRE AND PANIC ONLY
01/21/26
25-3084
Approval of this plan does not authorize or approve any omission or deviation from applicable regulations. Final approval is subject to field inspection. One set of approved plans shall be available on the project site at all times.

GENERAL SERVICES
Department of General Services
Architecture & Engineering Sections
State of California
Real Estate Services Division
Project Management & Development Branch
707 Third Street, Suite 4-105
West Sacramento, California 95605

KEVIN D. STTLER
M 33498
EXPIRES 9/30/26
REGISTERED PROFESSIONAL ENGINEER
MECHANICAL
STATE OF CALIFORNIA

DATE SIGNED: 12/13/24

Issue		
No.	Date	Description

Project
STAFF RESIDENCES REHABILITATION
PORTERVILLE, CA 93257
DEVELOPMENTAL SERVICES

Supervisor	Designed	Drawn
Approver	Designer	Author

DSA App No.	SFM Permit No.
N/A	25-S-3084-C-DR

Sheet Title
2 BEDROOM (BLDG 104) HVAC DEMO PLAN

Project Number
000000000006803

Sheet Scale
Sheet Number
MA11

1 2 BEDROOM (BLDG 104) HVAC DEMO PLAN — 1/4" = 1'-0"

capital engineering
RANCHO CORDOVA, CALIFORNIA
JD - JH — PM - DESIGN TEAM
200502.00 — PROJECT NO.

Copyright © 2021, California Department of General Services: Real Estate Services Division

V2

ISSUE DATE: OCTOBER 28, 2026

8/27/2025 10:10:03 AM
C:\Users\all\OneDrive - CapitalDocuments\200502.00_Porterville_Staff_Residences_MP22_Central_A_MAKH.rvt

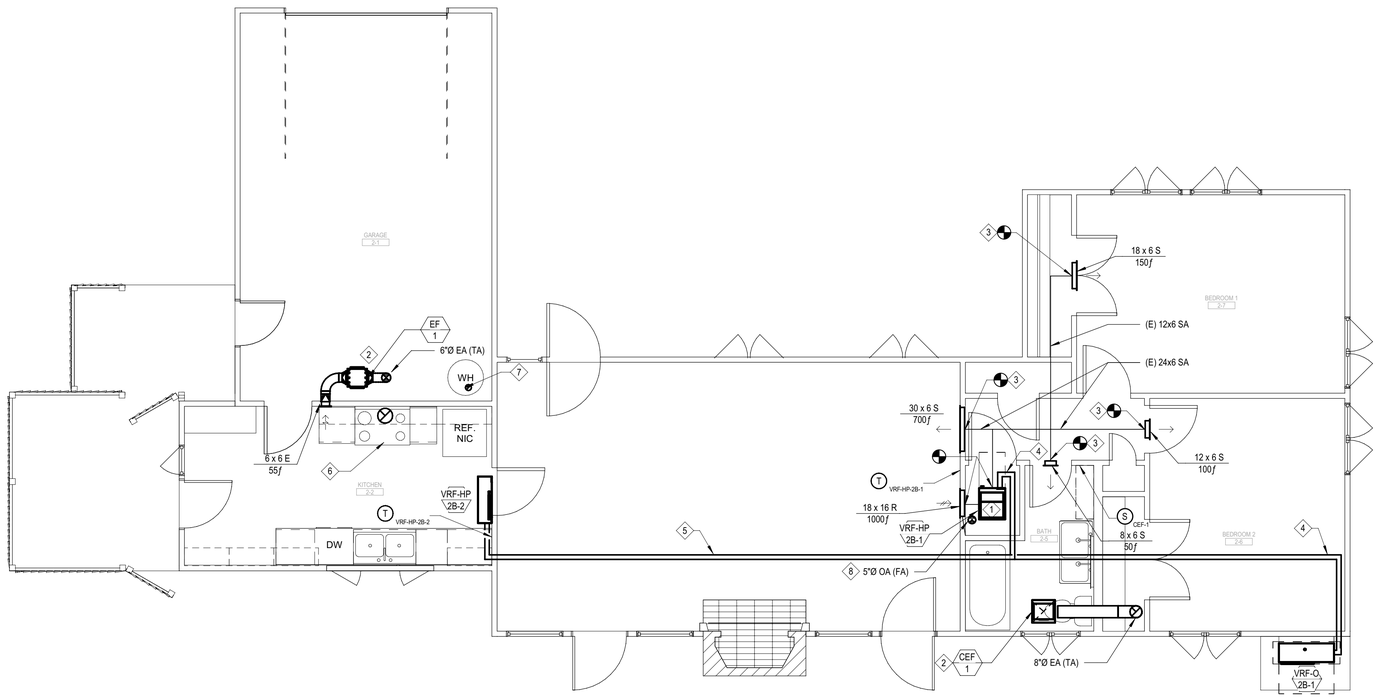

SHEET NOTES:

1. EXISTING DUCT ROUTING AND LOCATIONS HAVE BEEN APPROXIMATED BASED ON AVAILABLE EXISTING DRAWINGS. CONTRACTOR SHALL VERIFY EXACT LOCATION AND ROUTING IN FIELD.
2. ALL EXISTING DUCT WORK SHALL BE CLEANED PER SPECIFICATION SECTION '23 01 30 EXISTING HVAC DUCT SYSTEM CLEANING'.

KEYNOTES:

1. VERTICAL FAN COIL UNIT. CONNECT TO (E) SUPPLY AND RETURN DUCTS.
2. INSTALL (N) CEILING OR INLINE EXHAUST FAN AND DISCHARGE WITH ROOF CAP, SEE 5/M500.
3. PROVIDE NEW SUPPLY AND RETURN GRILLES AT ALL EXISTING GRILLE LOCATIONS.
4. REFRIGERANT LINESET, 3/8 RL & 5/8 RS. SEE DETAIL 6/M500.
5. REFRIGERANT LINESET, 1/4 RL & 1/2 RS. SEE DETAIL 6/M500.
6. GE 'JVW5301SJSS' 30" OR SIMILAR; WALL-MOUNT EXHAUST RANGE HOOD WITH LIGHT IN STAINLESS STEEL,CONVERTIBLE VENT INSTALL,MAX 350 CFM AIRFLOW CAPACITY. PRODUCT WEIGHT 43 LB, 120V, 2.5A. ROUTE 10" EA DUCT UP THRU ROOF, DISCHARGE WITH ROOF CAP, SEE 5/M500.
7. PROVIDE WATER HEATER WITH MANUFACTURER'S VENT THRU ROOF KIT.
8. ROUTE OUTSIDE DUCT FROM ROOF AND CONNECT TO RETURN AIR DUCT. PROVIDE MANUAL AIR DAMPER IN OUTSIDE AIR DUCT FOR BALANCING.

THE SCOPE OF WORK INVOLVED IN THIS PROJECT IS EXEMPT FROM THE DIVISION OF THE STATE ARCHITECT ACCESSIBILITY REQUIREMENTS IN ACCORDANCE WITH TITLE 24, CALIFORNIA CODE OF REGULATIONS, 2016 CALIFORNIA BUILDING CODE.

OFFICE OF THE STATE FIRE MARSHAL
APPROVED FIRE AND PANIC ONLY

CALIFORNIA DEPARTMENT OF FORESTRY & FIRE PROTECTION
FIRE
CAL FIRE
01/21/26
25-3084
CFC/CCR T 19/24

Approval of this plan does not authorize or approve any omission or deviation from applicable regulations. Final approval is subject to field inspection. One set of approved plans shall be available on the project site at all times.

DGS GENERAL SERVICES
Department of General Services
Architecture & Engineering Sections
State of California
Real Estate Services Division
Project Management & Development Branch
707 Third Street, Suite 4-105
West Sacramento, California 95605

REGISTERED PROFESSIONAL ENGINEER
KEVIN D. STTLER
M 33498
EXPIRES 9/30/26
MECHANICAL
STATE OF CALIFORNIA

DATE SIGNED: 12/13/24

Issue		
No.	Date	Description

Project
STAFF RESIDENCES REHABILITATION

PORTERVILLE, CA 93257

DEVELOPMENTAL SERVICES

Supervisor	Designed	Drawn
Approver	Designer	Author

DSA App No.	SFM Permit No.
N/A	25-S-3084-C-DR

Sheet Title
2 BEDROOM (BLDG 104) HVAC PLAN

Project Number
000000000006803

Sheet Scale

Sheet Number
MA21

capital engineering
RANCHO CORDOVA, CALIFORNIA
JD - JH PM - DESIGN TEAM
200502.00 PROJECT NO.

Copyright © 2021, California Department of General Services- Real Estate Services Division

V2

1 2 BEDROOM (BLDG 104) HVAC PLAN

1/4" = 1'-0"

ISSUE DATE: OCTOBER 28, 2026

RELATIVE BORDER SCALE IN INCHES 0 1 2 3

24 x 36

8/27/2025 10:10:04 AM C:\Users\all\OneDrive - Capitan\Documents\200502.00_Porterville_Staff_Residences_MP22_Central_Alex.rvt

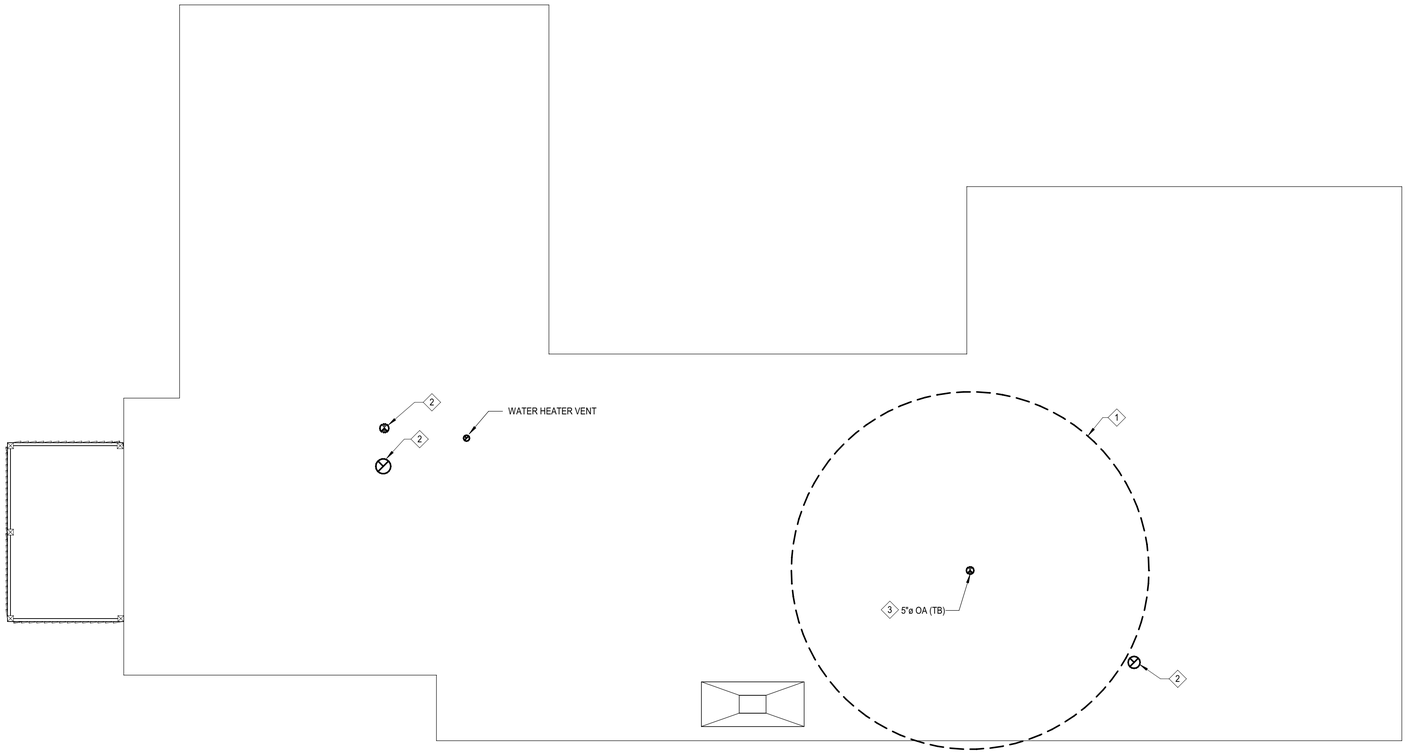

KEYNOTES:

1. LOCATE OUTSIDE AIR INTAKE MINIMUM OF 10' FROM ALL EXHAUST OUTLETS AND VTR'S.
2. TERMINATE EXHAUST DUCT WITH ROOF CAP, SEE 5/M500.
3. TERMINATE OUTSIDE AIR INTAKE WITH ROOF CAP, SEE 5/M500.

THE SCOPE OF WORK INVOLVED IN THIS PROJECT IS EXEMPT FROM THE DIVISION OF THE STATE ARCHITECT ACCESSIBILITY REQUIREMENTS IN ACCORDANCE WITH TITLE 24, CALIFORNIA CODE OF REGULATIONS, 2016 CALIFORNIA BUILDING CODE.

OFFICE OF THE STATE FIRE MARSHAL
APPROVED FIRE AND PANIC ONLY
01/21/26
25-3084
Approval of this plan does not authorize or approve any omission or deviation from applicable regulations. Final approval is subject to field inspection. One set of approved plans shall be available on the project site at all times.

DGS GENERAL SERVICES
Department of General Services
Architecture & Engineering Sections
State of California
Real Estate Services Division
Project Management & Development Branch
707 Third Street, Suite 4-105
West Sacramento, California 95605

REGISTERED PROFESSIONAL ENGINEER
KEVIN D. STTLER
M 33498
EXPIRES 9/30/26
MECHANICAL
STATE OF CALIFORNIA

DATE SIGNED: 12/13/24

Issue		
No.	Date	Description

Project
STAFF RESIDENCES REHABILITATION
PORTERVILLE, CA 93257
DEVELOPMENTAL SERVICES

Supervisor	Designed	Drawn
Approver	Designer	Author

DSA App No.	SFM Permit No.
N/A	25-S-3084-C-DR

Sheet Title
2 BEDROOM (BLDG 104) HVAC ROOF PLAN

Project Number
000000000006803

Sheet Scale
Sheet Number
MA22

capital engineering
RANCHO CORDOVA, CALIFORNIA
JD - JH PM - DESIGN TEAM
200502.00 PROJECT NO.

1 2 BEDROOM (BLDG 104) HVAC ROOF PLAN — 1/4" = 1'-0"

Copyright © 2021, California Department of General Services: Real Estate Services Division

ISSUE DATE: OCTOBER 28, 2026

RELATIVE BORDER SCALE IN INCHES

8/27/2025 10:10:04 AM C:\Users\all\OneDrive - Capital\Documents\200502.00_Porterville_Staff_Residences_MP22_Central_Alex.rvt

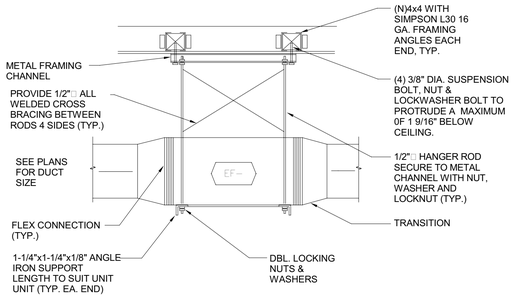

EXHAUST FAN MOUNTING - INLINE

SCALE : NONE

7 / M500

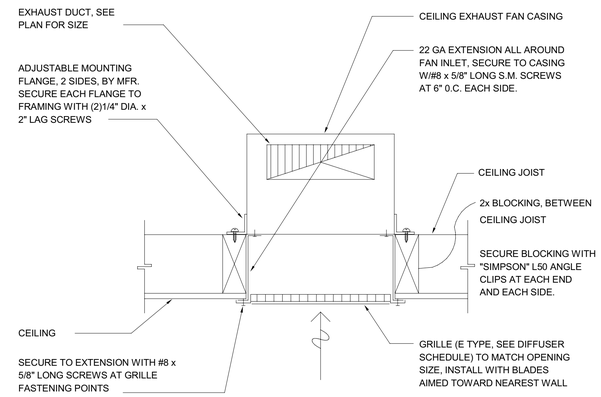

EXHAUST FAN MOUNTING - CEILING

SCALE : NONE

4 / M500

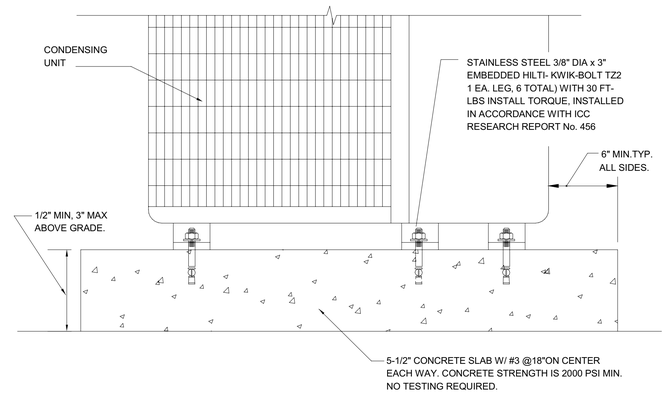

VRF HP UNIT MOUNTING - ON GRADE

SCALE : NONE

1 / M500

MUST TERMINATE 18" MIN ABOVE THE ROOF. MUST BE 10'-0" AWAY FROM OUTSIDE AIR INTAKES.

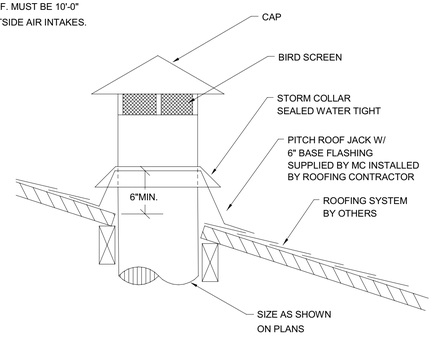

ROOF CAP

SCALE : NONE

5 / M500

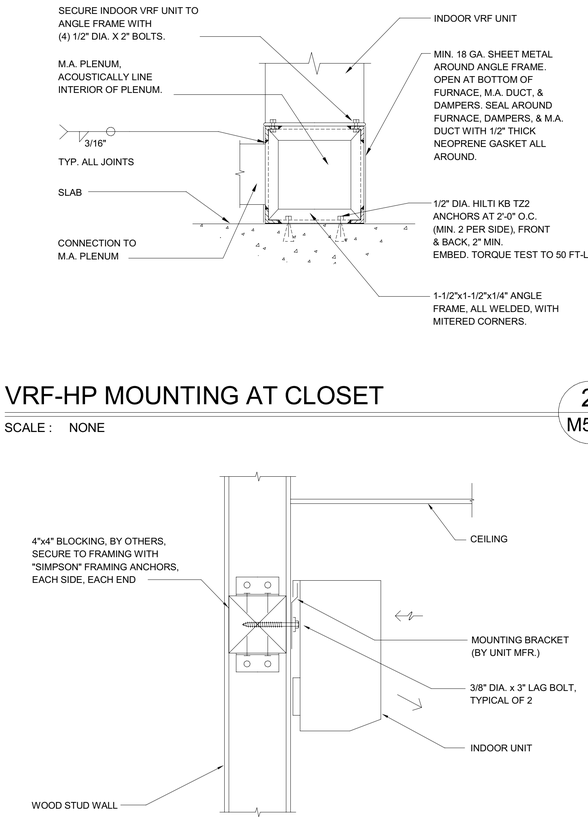

VRF-HP MOUNTING AT CLOSET

SCALE : NONE

2 / M500

UNLESS MORE THAN ONE MECH'L LINE IS LOCATED IN JOIST PENETRATION, DO NOT MAKE HOLE GREATER THAN 1/2" LARGER THAN THE OUTSIDE DIAMETER OF THE MECH'L LINE

MINIMUM SPACING BETWEEN MULTIPLE HOLES: d WHEN HOLE IS LARGER THAN 1" IN DIAMETER, 3" WHEN HOLE IS 1" AND LESS

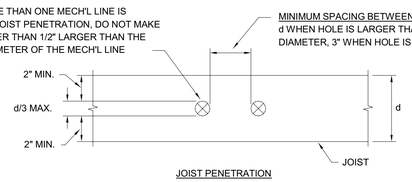

JOIST PENETRATION

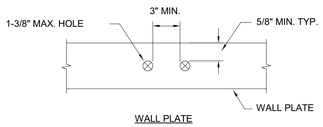

WALL PLATE

PENETRATIONS IN WOOD FRAMING

SCALE : NONE

6 / M500

SAC INDOOR WALL MOUNTING

SCALE : NONE

3 / M500

THE SCOPE OF WORK INVOLVED IN THIS PROJECT IS EXEMPT FROM THE DIVISION OF THE STATE ARCHITECT ACCESSIBILITY REQUIREMENTS IN ACCORDANCE WITH TITLE 24, CALIFORNIA CODE OF REGULATIONS, 2016 CALIFORNIA BUILDING CODE.

OFFICE OF THE STATE FIRE MARSHAL
APPROVED FIRE AND PANIC ONLY
01/21/26
25-3084
Approval of this plan does not authorize or approve any omission or deviation from applicable regulations. Final approval is subject to field inspection. One set of approved plans shall be available on the project site at all times.

DGS GENERAL SERVICES

Department of General Services
Architecture & Engineering Sections
State of California
Real Estate Services Division
Project Management & Development Branch
707 Third Street, Suite 4-105
West Sacramento, California 95605

REGISTERED PROFESSIONAL ENGINEER — KEVIN D. STTLER — M 33498 — EXPIRES 9/30/26 — MECHANICAL — STATE OF CALIFORNIA

DATE SIGNED: 12/13/24

Issue

No.	Date	Description

Project
STAFF RESIDENCES REHABILITATION
PORTERVILLE, CA 93257
DEVELOPMENTAL SERVICES

Supervisor	Designed	Drawn
Approver	Designer	Author

DSA App No.	SFM Permit No.
N/A	25-S-3084-C-DR

Sheet Title
HVAC DETAILS

Project Number
000000000006803

Sheet Scale

Sheet Number
M500

capital engineering
RANCHO CORDOVA, CALIFORNIA
JD - JH PM - DESIGN TEAM
200502.00 PROJECT NO.

Copyright © 2021, California Department of General Services: Real Estate Services Division

V2

ISSUE DATE: OCTOBER 28, 2026

RELATIVE BORDER SCALE IN INCHES 0 1 2 3

8/27/2025 10:10:03 AM
C:\Users\all\OneDrive - Capital\Documents\200502.00_Porterville_Staff_Residences_MP22_Central_ABXRLH.rvt

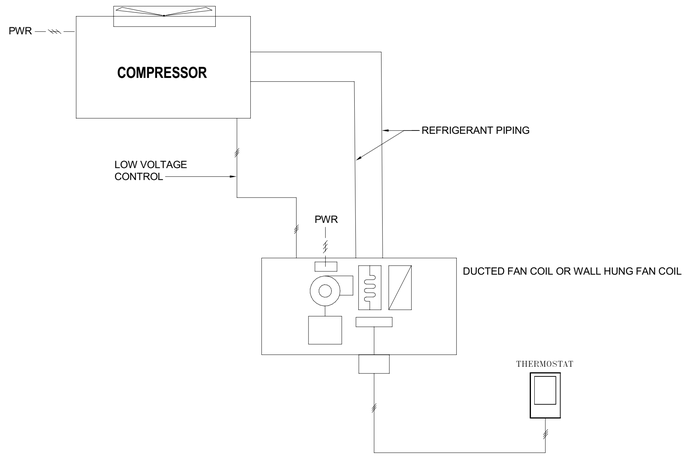

SEQUENCE OF OPERATION:

THE VRF SYSTEM WILL BE PROVIDED WITH ITS OWN INTERNAL CONTROLLERS AND LOGIC STAGE FANS, COOLING AND HEATING TO MAINTAIN A ZONE TEMPERATURE SET POINT. THIS CONTROLS SYSTEM IS PROVIDED AND PROGRAMMED BY THE MANUFACTURER.

TEMPERATURE CONTROL: THE UNIT WILL CONTROL TO MAINTAIN THE LOCALLY ADJUSTABLE ZONE TEMPERATURE SETPOINT (ZN-SP) AS SENSED BY THE ZONE TEMPERATURE (ZN-T) SENSOR.

COOLING MODE: THE DX COIL WILL BE STAGED IN SEQUENCE TO MAINTAIN THE TEMPERATURE SETPOINT.

HEATING MODE: THE DX COIL WILL BE STAGED IN SEQUENCE TO MAINTAIN THE TEMPERATURE SETPOINT.

VRF SYSTEM CONTROL

SCALE : NONE

1
M600

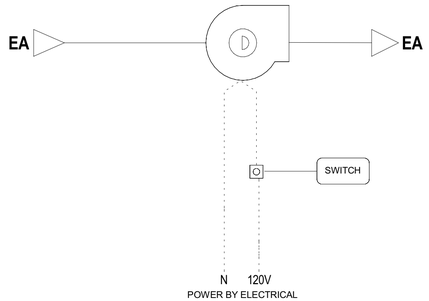

FAN SHALL BE COMMANDED ON AND OFF WITH WALL SWITCH.
MECHANICAL EXHAUST SYSTEM SHALL BE INSTALLED TO OPERATE CONTINUOUSLY AND LEFT ON.

EF CONTROL - SWITCH

SCALE : NONE

2
M600

capital engineering
RANCHO CORDOVA, CALIFORNIA
JD - JH — PM - DESIGN TEAM
200502.00 — PROJECT NO.

THE SCOPE OF WORK INVOLVED IN THIS PROJECT IS EXEMPT FROM THE DIVISION OF THE STATE ARCHITECT ACCESSIBILITY REQUIREMENTS IN ACCORDANCE WITH TITLE 24, CALIFORNIA CODE OF REGULATIONS, 2016 CALIFORNIA BUILDING CODE.

OFFICE OF THE STATE FIRE MARSHAL
APPROVED FIRE AND PANIC ONLY
01/21/26
25-3084
Approval of this plan does not authorize or approve any omission or deviation from applicable regulations. Final approval is subject to field inspection. One set of approved plans shall be available on the project site at all times.

DGS GENERAL SERVICES

Department of General Services
Architecture & Engineering Sections
State of California
Real Estate Services Division
Project Management & Development Branch
707 Third Street, Suite 4-105
West Sacramento, California 95605

REGISTERED PROFESSIONAL ENGINEER — KEVIN D. STTLER — M 33498 — EXPIRES 9/30/26 — MECHANICAL — STATE OF CALIFORNIA

DATE SIGNED: 12/13/24

Issue

No.	Date	Description

Project
STAFF RESIDENCES REHABILITATION

PORTERVILLE, CA 93257

DEVELOPMENTAL SERVICES

Supervisor	Designed	Drawn
Approver	Designer	Author

DSA App No.	SFM Permit No.
N/A	25-S-3084-C-DR

Sheet Title
HVAC CONTROLS

Project Number
000000000006803

Sheet Scale

Sheet Number
M600

Copyright © 2021, California Department of General Services- Real Estate Services Division

V2

ISSUE DATE: OCTOBER 28, 2026

RELATIVE BORDER SCALE IN INCHES 0 1 2 3

8/27/2025 10:10:03 AM
C:\Users\all\OneDrive - Capital\Documents\200502.00_Porterville_Staff_Residences_MP22_Central_AlexKu.rvt

SYMBOLS LEGEND

SYMBOL	ABBREVIATION	DESCRIPTION
	---	3 WAY MODULATING CONTROL VALVE
	---	3 WAY TWO POSITION CONTROL VALVE
	---	3 WAY VALVE
	---	ANCHOR
	---	ANGLE GLOBE VALVE
	AVN	ANGLE VALVE
	AQ	AQUASTAT
	AD	AREA DRAIN
	---	AUTOMATIC AIR VENT
	---	AUTOMATIC FLOW CONTROL
	BFP, BP, DCW	BACKFLOW PREVENTER, REDUCE PRESSURE, DOUBLE CHECKVALVE
	---	BALANCING VALVE
	---	BALL JOINT
	---	BALL VALVE
	---	BOTTOM CONNECTION
	---	BUTTERFLY VALVE
BPT	BPT	BYPASS TIMER
	CBV	CALIBRATED BALANCE VALVE
	CB, RD	CATCH BASIN, ROOF DRAIN
	---	CHECK VALVE
	---	CIRCUIT SETTER VALVE
	CP	CIRCULATING PUMP
	CO	CLEANOUT
DS	DS	DYNAMIC SENSOR
	---	ECCENTRIC REDUCER
	EJ	EXPANSION JOINT
F	FD	FIRE DAMPER
	FDC	FIRE DEPARTMENT CONNECTION
	FHC	FIRE HOSE RACK AND CABINET
	FH	FIRE HYDRANT
FS	FS	FIRE/SMOKE DAMPER
	---	FLEXIBLE CONNECTOR
	---	FLOAT & THERMOSTATIC TRAP
	FD	FLOOR DRAIN
	FS	FLOOR SINK
	---	FLOW ARROW
FE	---	FLOW ELEMENT
	FLV	FLOW LIMITING VALVE
FS	FS	FLOW SWITCH
	GCK	GAGE COCK

SYMBOLS LEGEND

SYMBOL	ABBREVIATION	DESCRIPTION
	GSCK, PC	GAS COCK, PLUG COCK
	GM	GAS METER
	GPR	GAS PRESSURE REGULATOR
	---	GATE VALVE WITH HOSE ADAPTER
	---	GATE VALVE
	---	GLOBE VALVE
	HD	HOPPER DRAIN
	HB	HOSE BIBB
	HB	HOSE BIBB
H X	H	HUMIDISTAT
	---	INVERTED BUCKET TRAP
	---	LIMIT OF DEMOLITION
	---	MANUAL AIR VENT
	---	MODULATING CONTROL VALVE
	---	PIPE BREAK
	---	PIPE CAP
	---	PIPE DOWN
	---	PIPE GUIDE
	---	PIPE UP
	---	POINT OF CONNECTION
	PIV	POST INDICATOR VALVE
	PRV	PRESSURE REGULATING VALVE
	---	PRESSURE RELIEF VALVE
	---	REDUCER
SD	SD	SMOKE DAMPER
SD	SKD	SMOKE DETECTOR
	---	SOLENOID VALVE
	---	STRAINER
TS X	TS	TEMPERATURE SENSOR
	---	TEST PLUG
	---	THERMOMETER
T X	T	THERMOSTAT
	TP	TRAP PRIMER
	---	TWO POSITION CONTROL VALVE
	---	UNION
	---	VALVE IN RISER/DROP
	VB	VALVE IN VALVE BOX
	---	WALL CLEANOUT
	WHA	WATER HAMMER ARRESTOR
WM	WM	WATER METER

PLUMBING GENERAL NOTES

1. OFFSET VENT THROUGH ROOFS 10'-0" MINIMUM FROM AIR INTAKES AND 4'-0" FROM OUTSIDE WALLS.
2. HVAC EQUIPMENT IS SHOWN FOR THE COORDINATION OF UTILITIES ONLY. REFER TO 'M' SHEETS FOR MORE INFORMATION.
3. THE CONNECTION OF NATURAL GAS LINES TO EQUIPMENT SHALL INCLUDE A LINE SIZE SHUT-OFF VALVE, UNION, AND A MINIMM 6" LONG DIRT LEG WITH ACCESSIBLE END CAP.
4. THE CONNECTION OF CONDENSATE DRAIN LINES TO HVAC EQUIPMENT SHALL INCLUDE A MINIMUM 4" DEEP "P"-TRAP AND PLUGGED TEE AT ALL OFFSETS.
5. PROVIDE WATER HAMMER ARRESTORS (WHA) AS INDICATED ON PLUMBING PLANS AND/OR AS DESCRIBED WITHIN DIVISION 22 SPECIFICATIONS. SIZING SHALL BE IN ACCORDANCE WITH PDI STANDARD WH-201.
6. FOR PIPES PASSING THROUGH, UNDER, OR PARALLEL TO BUILDING FOOTINGS, RETAINING WALLS ETC. REFER TO STRUCTURAL DETAILS, 'S' SHEETS, FOR TYPICAL ARRANGEMENT.
7. CONTRACTOR SHALL FIELD VERIFY ALL POINTS OF CONNECTION TO SITE PIPING (LOCATIONS AND INVERT) PRIOR TO EXCAVATION, FABRICATION AND INSTALLATION OF ASSOCIATED PIPING RUNS. NOTIFY STATE IMMEDIATELY IF POINTS OF CONNECTION OR INVERTS ARE DIFFERENT THAN REPRESENTED ON THE DRAWINGS.
8. OFFSET ALL RISERS AND DROPS TO AVOID PENETRATIONS AT TOP PLATES.
9. SEAL ALL PIPE PENETRATIONS THRU FLOORS WATERTIGHT.
10. DRAWINGS SHALL BE CONSIDERED DIAGRAMMATIC ONLY. CONTRACTOR SHALL FIELD VERIFY WHERE POSSIBLE, EXACT LOCATIONS, SIZES, AND ELEVATIONS OF ALL ITEMS SHOWN PRIOR TO THE INSTALLATION OF ANY NEW WORK.
11. THE DRAWINGS ARE NOT INTENDED TO SHOW EVERY OFFSET OR FITTING OR EVERY STRUCTURAL DIFFICULTY THAT MAY BE ENCOUNTERED DURING INSTALLATION OF THE WORK. LOCATION OF ALL ITEMS NOT DEFINITELY FIXED BY DIMENSIONS ARE APPROXIMATE ONLY. EXACT LOCATIONS NECESSARY TO SECURE BEST CONDITIONS AND RESULTS MUST BE DETERMINED AT THE JOB SITE AND SHALL HAVE THE APPROVAL OF THE STATE BEFORE BEING INSTALLED.
12. ALL VALVES SHOWN SHALL BE FULL LINE SIZE UNLESS OTHERWISE NOTED.
13. CLOSELY COORDINATE ALL WORK WITH OTHER TRADES PRIOR TO TRENCHING OR INSTALLATION OF NEW. IDENTIFY SIZE AND LOCATIONS OF ALL PENETRATIONS THROUGH FOUNDATIONS, WALLS OR ROOFS PRIOR TO FABRICATION OF ANY SYSTEMS OR ORDERING MATERIALS AFFECTED BY POSSIBLE COORDINATION CONFLICTS.
14. CONCRETE ANCHORS SHALL BE HILTI, KWIK BOLT TZ 3/8" WITH EMBEDMENT AS PER STRUCTURAL PLANS. ANCHORS SHALL BE TESTED PER IR 19-1, INTERPRETIVE REGULATION FOR EXPANSION ANCHORS IN HARDENED CONCRETE. ANCHOR TEST SHALL BE 968 LBS. TENSION.
15. PIPING SHALL BE SUPPORTED AND BRACED IN STRICT COMPLIANCE WITH DIVISION 22 SPECIFICATIONS.
16. ALL NEW SANITARY WASTE PIPING SHOWN SHALL BE SLOPED AT 1/4" PER FOOT MINIMUM UNLESS OTHERWISE NOTED ON PLANS. WHERE SLOPES LESS THAN 1/4" PER FOOT ARE INDICATED, CONTRACTOR SHALL SLOPE NEW PIPING UNIFORMLY BETWEEN UPPER TERMINAL OF PIPE AND THE POINT OF CONNECTION TO THE SITE PIPING (AS INDICATED ON THE CIVIL PLANS) TO ACHIEVE MAXIMUM SLOPE POSSIBLE AND IN NO CASE SHALL THE PIPING BE SLOPED LESS THAN THE MINIMUM INDICATED.
17. CONCEAL ALL PIPING IN WALL FURRING, PARTITIONS, ETC.
18. REFER TO ARCHITECTURAL DRAWINGS FOR BUILDING DIMENSIONS AND EXACT LOCATIONS OF PLUMBING FIXTURES.

THE SCOPE OF WORK INVOLVED IN THIS PROJECT IS EXEMPT FROM THE DIVISION OF THE STATE ARCHITECT ACCESSIBILITY REQUIREMENTS IN ACCORDANCE WITH TITLE 24, CALIFORNIA CODE OF REGULATIONS, 2016 CALIFORNIA BUILDING CODE.

OFFICE OF THE STATE FIRE MARSHAL
APPROVED FIRE AND PANIC ONLY

CALIFORNIA DEPARTMENT OF FORESTRY & FIRE PROTECTION
FIRE
01/21/26
25-3084
CIVICLT SBS

Approval of this plan does not authorize or approve any omission or deviation from applicable regulations. Final approval is subject to field inspection. One set of approved plans shall be available on the project site at all times.

DGS GENERAL SERVICES
Department of General Services
Architecture & Engineering Sections
State of California
Real Estate Services Division
Project Management & Development Branch
707 Third Street, Suite 4-105
West Sacramento, California 95605

REGISTERED PROFESSIONAL ENGINEER
KEVIN D. STTLER
M 33498
EXPIRES 9/30/26
MECHANICAL
STATE OF CALIFORNIA

DATE SIGNED: 12/13/24

Issue

No.	Date	Description

Project
STAFF RESIDENCES REHABILITATION

PORTERVILLE, CA 93257

DEVELOPMENTAL SERVICES

Supervisor	Designed	Drawn
Approver	Designer	Author

DSA App No.	SFM Permit No.
N/A	25-S-3084-C-DR

Sheet Title
PLUMBING LEGENDS & NOTES

Project Number
000000000006803

Sheet Scale

Sheet Number
P001

capital engineering
RANCHO CORDOVA, CALIFORNIA
JD - JH PM - DESIGN TEAM
200502.00 PROJECT NO.

Copyright © 2021, California Department of General Services- Real Estate Services Division

V2

ISSUE DATE: OCTOBER 28, 2026

RELATIVE BORDER SCALE IN INCHES

8/27/2025 10:10:04 AM
C:\Users\all\OneDrive - Capital\Documents\200502.00_Porterville_Staff_Residences_MP22_Central_Alex.rvt

PLUMBING ABBREVIATIONS

ABBREVIATION	DESCRIPTION
ABC	ABOVE CEILING
ACC DR	ACCESS DOOR
ACC P	ACCESS PANEL
AFF	ABOVE FINISHED FLOOR
AFG	ABOVE FINISHED GRADE
AFP	ABOVE FINISHED PAVEMENT
AHV	AIR HOSE VALVE
ASH	AUTOMATIC SPRINKLER HEAD
BEL	BELOW
BFF	BELOW FINISHED FLOOR
BFG	BELOW FINISHED GRADE
BFP	BACKFLOW PREVENTER
BLDG	BUILDING
CDC	CALIFORNIA DEPARTMENT OF CORRECTIONS
CFF	CAPPED FOR FUTURE
CLG	CEILING
CMP	CORRUGATED METAL PIPE
COL	COLUMN
CONN	CONNECT/CONNECTION
CONT	CONTINUATION
CWH	COLD WATER HEADER
(D)	DROP
DF	DRINKING FOUNTAIN
DIA	DIAMETER
DN	DOWN
DW	DRY WELL
DW	DISHWASHER
DWG	DRAWING
(E)	EXISTING
EL	ELEVATION
ELEC	ELECTRICAL
EQUIP	EQUIPMENT
ES	EMERGENCY SHOWER
EW	EYE WASH
EWC	ELECTRIC WATER COOLER
FA	FROM ABOVE
FB	FROM BELOW
FD	FLOOR DRAIN
FFE	FINISHED FLOOR ELEVATION
FF	FINISHED FLOOR
FLR	FLOOR
FSR	FIRE SPRINKLER RISER
FT	FLOOR TOILET
/FT	PER FOOT
FTK	FLUSH TANK
FU	FIXTURE UNIT
FV	FLUSH VALVE
GAL	GALLONS
HC	HANDICAPPED
HR	HOUR
HS	HAND SINK
HT	HEIGHT
HTR	HEATER
HWH	HOT WATER HEATER
IE	INVERT ELEVATION
KEC	KITCHEN EQUIPMENT CONTRACTOR
KS	KITCHEN SINK
LV	LAVATORY
MC	MOTOR CONTROLLER
MECH	MECHANICAL
MTD	MOUNTED

ABBREVIATION	DESCRIPTION
(N)	NEW
NC	NORMALLY CLOSED
NO	NORMALLY OPEN
NTS	NOT TO SCALE
OFCI	OWNER FURNISHED, CONTRACTOR INSTALLED
OFOI	OWNER FURNISHED, OWNER INSTALLED
OH	OVERHEAD
OS & Y	OUTSIDE SCREW AND YOKE
PH	PHASE
PLBG	PLUMBING
PLD	PLANTER DRAIN
PO	PLUGGED OUTLET
PRS	PRE-RINSE SINK
PS	POT SINK
PT	PLASTER TRAP
(R)	RISER
REC	RECESSED
REQD	REQUIRED
REV	REVISION
RM	ROOM
RPBP	REDUCED PRESSURE BACKFLOW PREVENTER
RWL	RAIN WATER LEADER
SD	STORM DRAIN
SH	SHOWER
SPEC	SPECIFICATION
SS	STAINLESS STEEL/SERVICE SINK
STD	STANDARD
STRUC	STRUCTURAL
(TA)	TO ABOVE
(TB)	TO BELOW
T.C.C.	TEMPERATURE CONTROLS CONTRACTOR
TD	TRENCH DRAIN
TEMP	TEMPERATURE
TOC	TOP OF CONCRETE
TS	TAMPER SWITCH
TYP	TYPICAL
UF	UNDER FLOOR
UG	UNDERGROUND
UL	UNDERWRITERS' LABORATORIES
UR	URINAL
US	UNDER SLAB
V	VENT
VTR	VENT THRU ROOF
VO	VALVED OUTLET
VW	VACUUM WASTE
W/	WITH
W/O	WITHOUT
W	WASTE
WC	WATER CLOSET
WC/L	WATER CLOSET AND LAVATORY
WF	WASH FOUNTAIN
ZCV	ZONE CONTROL VALVE

THE SCOPE OF WORK INVOLVED IN THIS PROJECT IS EXEMPT FROM THE DIVISION OF THE STATE ARCHITECT ACCESSIBILITY REQUIREMENTS IN ACCORDANCE WITH TITLE 24, CALIFORNIA CODE OF REGULATIONS, 2016 CALIFORNIA BUILDING CODE.

OFFICE OF THE STATE FIRE MARSHAL
APPROVED FIRE AND PANIC ONLY
01/21/26
25-3084
Approval of this plan does not authorize or approve any omission or deviation from applicable regulations. Final approval is subject to field inspection. One set of approved plans shall be available on the project site at all times.

GENERAL SERVICES
Department of General Services
Architecture & Engineering Sections
State of California
Real Estate Services Division
Project Management & Development Branch
707 Third Street, Suite 4-105
West Sacramento, California 95605

REGISTERED PROFESSIONAL ENGINEER
KEVIN D. STTLER
M 33498
EXPIRES 9/30/26
MECHANICAL
STATE OF CALIFORNIA

DATE SIGNED: 12/13/24

Issue		
No.	Date	Description

Project
STAFF RESIDENCES REHABILITATION
PORTERVILLE, CA 93257
DEVELOPMENTAL SERVICES

Supervisor	Designed	Drawn
Approver	Designer	Author

DSA App No.	SFM Permit No.
N/A	25-S-3084-C-DR

Sheet Title
PLUMBING LEGENDS & NOTES

Project Number
000000000006803

Sheet Scale

Sheet Number
P002

capital engineering
RANCHO CORDOVA, CALIFORNIA
JD - JH PM - DESIGN TEAM
200502.00 PROJECT NO.

Copyright © 2021, California Department of General Services: Real Estate Services Division

V2

ISSUE DATE: OCTOBER 28, 2026

RELATIVE BORDER SCALE IN INCHES 0 1 2 3

8/27/2025 10:10:05 AM C:\Users\all\OneDrive - CapitalDocuments\200502.00_Porterville_Staff_Residences_MP22_Central_Alex\Central.rvt

PLUMBING FIXTURE SCHEDULE

ADA	SYMBOL	FIXTURE	FIXTURE MANUFACTUER AND MODEL NO.	FAUCET OR VALVE MANUFACTURER AND MODEL NO.	TRIM AND SUPPORT MANUFACTURER AND MODEL NO.	REMARKS	VENT	WASTE		COLD WATER		HOT WATER	
								BRANCH	OUTLET	BRANCH	OUTLET	BRANCH	OUTLET
YES	**WC-1**	WATER CLOSET FLOOR MOUNTED FLUSH TANK	"KOHLER" HIGHLINE NO. K-3519 FLOOR MOUNTED, ELONGATED, 1.0 GPF, PRESSURE ASSISTED SIPHON JET TANK TYPE. 17-1/8" RIM HEIGHT.	INTEGRAL	SEAT: "CHURCH" MODEL 295SSCT OR "BEMIS" MODEL 1955SSCT. PROVIDE WITH SELF-SUSTAINING CONCEALED CHECK HINGES, ONE PIECE STAINLESS STEEL POSTS. WHITE COLER. SUPPLY STOP: "BRASS CRAFT" MODEL SR-3712-DL.	WHERE USED FOR CBC ACCESSIBLE WATER CLOSETS, THE FLUSH TRIP LEVER SHALL BE MOUNTED ON THE WIDE SIDE OF THE WATER CLOSET ENCLOSURE.	2"	4"	4"	1"	3/4"	-	-
YES	**SH-1**	SHOWER FLUSH MOUNTED	"SYMMONS" ORIGINS 9603-PLR-1.5 HAND SHOWER SYSTEM. WALL/HAND SHOWER W/ 5' FLEXIBLE METAL HOSE, IN LINE VACUUM BREAKER AND WALL CONNECTION. 36" SLIDE BAR FOR MOUNTING HAND SHOWER, 1.5 GPM FLOW RATE RESTRICTOR, POLISHED CHROME FINISH.	SYMMONS TEMPTROL PRESSURE BALANCING MIXING VALVE WITH ADJUSTABLE STOP SCREW TO LIMIT HANDLE TURN. SEPARATE DUAL OUTLET DIVERTER VALVE.	PROVIDE WITH 1.5 GPM FLOW RATE RESTRICTOR. SHOWER DRAIN SHALL BE "J.R. SMITH" MODEL 2010-CPHU-TT-BB.	MOUNT AT HEIGHT INDICATED ON ARCHTECTURAL DRAWINGS.	1-1/2"	2"	2"	3/4"	1/2"	3/4"	1/2"
YES	**S-1**	KITCHEN SINK COUNTER MOUNTED ONE COMPARTMENT	"ELKAY" MODEL DLR312212, 22" FRONT TO BACK, 31" WIDE x 12" DEPTH OVERALL. 18 GAUGE STAINLESS STEEL, LEDGE BACK WITH SELF-RIM. PROVIDE SINGLE FAUCET HOLE. PROVIDE REAR DRAIN LOCATION. PROVIDE FACTORY ADHERED VANDAL RESISTANT BACKING PLATE AT FAUCET, AND SLOT AT FAUCET FOR VANDAL RESISTANT PINS.	"CHICAGO" ECAST MODEL 1888-E35-369ABCP, WITH 2-3/8" LEVER HANDLES, 9-1/2" SWING TUBE SPOUT AND 1.5 GPM PRESSURE COMPENSATING SOFTFLO AERATOR.	"ELKAY" MODEL LKAD35, OFFSET CRUMB CUP STRAINER WITH REMOVABLE BASKET AND P-TRAP. INSTALL P-TRAP FLUSH TO WALL.	COUNTER MOUNTED.	1-1/2"	2"	1-1/2"	3/4"	1/2"	3/4"	1/2"
YES	**S-2**	KITCHEN SINK COUNTER MOUNTED TWO COMPARTMENTS	"ELKAY" MODEL DLR432212, 22" FRONT TO BACK, 43" WIDE x 12" DEPTH OVERALL. 18 GAUGE STAINLESS STEEL, TWO COMPARTMENT WITH LEDGE BACK WITH SELF-RIM. PROVIDE FAUCET HOLDS ON 8" CENTERS. PROVIDE REAR DRAIN LOCATION FOR BOTH COMPARTMENTS.	"CHICAGO" ECAST MODEL 1888-E35-369ABCP, WITH 2-3/8" LEVER HANDLES, 9-1/2" SWING TUBE SPOUT AND 1.5 GPM PRESSURE COMPENSATING SOFTFLO AERATOR.	"ELKAY" MODEL LKAD35, OFFSET CRUMB CUP STRAINER WITH REMOVABLE BASKET AND P-TRAP FOR EACH COMPARTMENT. INSTALL P-TRAP FLUSH TO WALL.	COUNTER MOUNTED.	1-1/2"	2"	1-1/2"	3/4"	1/2"	3/4"	1/2"
	WB	WASHING MACHINE WALL BOX	"GUY GRAY" MODEL MWB-13 WASHING MACHINE WALL BOX, WITH 1/2" SWEAT CONN. INLET AND 2" OUTLET	INTEGRAL	INTEGRAL	PROVIDE STAINLESS STEEL BOX AND STAINLESS STEEL FACE PLATE.	-	-	-	3/4"	1/2"	3/4"	1/2"
	RIM	REFRIGERATOR ICE MAKER	"GUY GRAY" MODEL SSIB2AB LEAD FREE ICE MAKER HOOK-UP, WITH 1/2" FIP INLET AND 1/4"COMPRESSION OUTLET.	INTEGRAL	INTEGRAL	PROVIDE STAINLESS STEEL BOX AND STAINLESS STEEL FACE PLATE.	-	-	-	1/2"	1/4"	-	-
	HB	HOSE BIBB	"J.R. SMITH" MODEL 5509. EXTERIOR WALL MOUNT NON-FREEZE.		WITH INTEGRAL VACUUM BREAKER		-	-	-	3/4"	3/4"	-	-

MISC. PLUMBING SCHEDULE

TAG	DESCRIPTION
GD 1	GARBAGE DISPOSER "IN-SINK-ERATOR" EVOLUTION ESSENTIAL, CONTINUOUS FEED, 3/4HP, CAPACITOR START. WHERE INSTALLED IN 2 COMPARTMENT SINK, INSTALL DISPOSER IN RIGHT HAND COMPARTMENT. PROVIDE WALL SWITCH FOR OPERATION OF DISPOSER AND PROVIDE FULL 6 YEAR PARTS AND SERVICE WARRANTY FOR DISPOSER.
GWH 1	GAS WATER HEATER "AO SMITH" PROLINE GDNT-50L, 50 GAL STORAGE CAPACITY, 38 MBH INPUT, 41 GPH @ 90 DEGREES RISE, ULTRA-LOW NOx, 120V/60HZ/1PH. OPERATING WEIGHT: 600 LBS PROVIDE WITH "SIOUX CHIEF" 598-010 WATER HEATER STAND. 21"x21"x18"H, 18 GAUGE METAL, RATED TO HOLD 650 LBS. MOUNTING DETAIL: 1/P500
ET 1	EXPANSION TANK "AO SMITH" PMI-2 EXPANSION TANK. FIELD ADJUSTABLE 38 PSI AIR CHARGE. 2 GALLON.

THE SCOPE OF WORK INVOLVED IN THIS PROJECT IS EXEMPT FROM THE DIVISION OF THE STATE ARCHITECT ACCESSIBILITY REQUIREMENTS IN ACCORDANCE WITH TITLE 24, CALIFORNIA CODE OF REGULATIONS, 2016 CALIFORNIA BUILDING CODE.

OFFICE OF THE STATE FIRE MARSHAL
APPROVED FIRE AND PANIC ONLY
01/21/26
25-3084
Approval of this plan does not authorize or approve any omission or deviation from applicable regulations. Final approval is subject to field inspection. One set of approved plans shall be available on the project site at all times.

DGS GENERAL SERVICES
Department of General Services
Architecture & Engineering Sections
State of California
Real Estate Services Division
Project Management & Development Branch
707 Third Street, Suite 4-105
West Sacramento, California 95605

REGISTERED PROFESSIONAL ENGINEER
KEVIN D. STTLER
M 33498
EXPIRES 9/30/26
MECHANICAL
STATE OF CALIFORNIA

DATE SIGNED: 12/13/24

Issue		
No.	Date	Description

Project
STAFF RESIDENCES REHABILITATION

PORTERVILLE, CA 93257

DEVELOPMENTAL SERVICES

Supervisor	Designed	Drawn
Approver	Designer	Author

DSA App No.	SFM Permit No.
N/A	25-S-3084-C-DR

Sheet Title
PLUMBING SCHEDULES

Project Number
000000000006803

Sheet Scale

Sheet Number
P003

capital engineering
RANCHO CORDOVA, CALIFORNIA
JD - JH PM - DESIGN TEAM
200502.00 PROJECT NO.

Copyright © 2021, California Department of General Services, Real Estate Services Division

V2

ISSUE DATE: OCTOBER 28, 2026

RELATIVE BORDER SCALE IN INCHES 0 1 2 3

8/27/2025 10:10:05 AM C:\Users\all\OneDrive - CapitalDocuments\200502.00_Porterville_Staff_Residences_MP22_Central_Alex\Cl.rvt

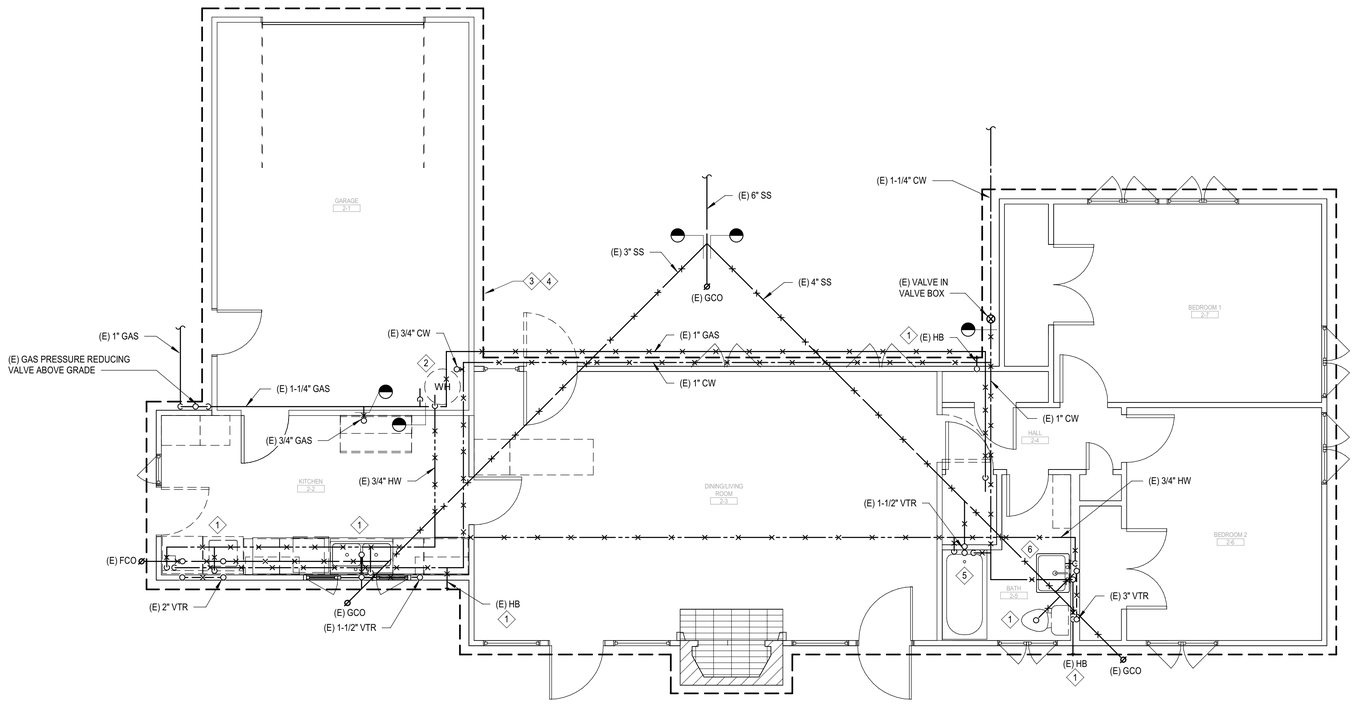

SHEET NOTES:

1. ALL EXISTING DOMESTIC COLD WATER, DOMESTIC HOT WATER, SANITARY SEWER, AND GAS PIPING IS BELOW SLAB AND STUBS UP AT EACH FIXTURE/APPLIANCE UNLESS OTHERWISE NOTED.
2. ALL EXISTING VENT PIPING IS ROUTED IN WALLS.

KEYNOTES:

1. DEMOLISH (E) PLUMBING FIXTURE.
2. DEMOLISH (E) WATER HEATER. PROTECT GAS PIPE CONNECTION AND PREPARE FOR CONNECTION TO NEW WATER HEATER.
3. DEMOLISH ALL (E) SANITARY SEWER, VENT, AND DOMESTIC WATER PIPING. ROUTING AND LOCATION OF (E) PLUMBING PIPING IS BASED ON AVAILABLE RECORD DRAWINGS AND SOME NOMINAL FIELD VERIFICATION. THESE DRAWINGS ARE INTENDED TO CONVEY 'ORDER-OF-MAGNITUDE' SCOPE ONLY AND SHALL NOT BE RELIED UPON EXCLUSIVELY FOR BIDDING AND DEMOLITION WORK. CONTRACTOR SHALL VISIT THE SITE PRIOR TO BIDDING AND INDEPENDENTLY VERIFY SCOPE AND FAMILIARIZE THEMSELVES WITH THE BUILDING, SYSTEMS, AND EQUIPMENT TO BE DEMOLISHED.
4. DEMOLISH ALL (E) GAS PIPING, EXCEPT FOR PIPE SERVING THE (E) WATER HEATER. (E) WATER HEATER GAS PIPING IS TO REMAIN.
5. (E) SHOWER TUB TO BE REMOVED AND REINSTALLED, SEE ARCH FOR MORE INFORMATION.
6. (E) BATHROOM SINK TO BE REMOVED AND REINSTALLED, SEE ARCH FOR MORE INFORMATION.

THE SCOPE OF WORK INVOLVED IN THIS PROJECT IS EXEMPT FROM THE DIVISION OF THE STATE ARCHITECT ACCESSIBILITY REQUIREMENTS IN ACCORDANCE WITH TITLE 24, CALIFORNIA CODE OF REGULATIONS, 2016 CALIFORNIA BUILDING CODE.

OFFICE OF THE STATE FIRE MARSHAL
APPROVED FIRE AND PANIC ONLY
01/21/26
25-3084
Approval of this plan does not authorize or approve any omission or deviation from applicable regulations. Final approval is subject to field inspection. One set of approved plans shall be available on the project site at all times.

GENERAL SERVICES
Department of General Services
Architecture & Engineering Sections
State of California
Real Estate Services Division
Project Management & Development Branch
707 Third Street, Suite 4-105
West Sacramento, California 95605

REGISTERED PROFESSIONAL ENGINEER
KEVIN D. STTLER
M 33498
EXPIRES 9/30/26
MECHANICAL
STATE OF CALIFORNIA

DATE SIGNED: 12/13/24

Issue		
No.	Date	Description

Project
STAFF RESIDENCES REHABILITATION
PORTERVILLE, CA 93257
DEVELOPMENTAL SERVICES

Supervisor	Designed	Drawn
Approver	Designer	Author

DSA App No.	SFM Permit No.
N/A	25-S-3084-C-DR

Sheet Title
2 BEDROOM (BLDG 104) PLUMBING DEMO PLAN

Project Number
000000000006803

Sheet Scale
Sheet Number
PA11

1 2 BEDROOM (BLDG 104) PLUMBING DEMO PLAN — 1/4" = 1'-0"

capital engineering
RANCHO CORDOVA, CALIFORNIA
JD - JH — PM - DESIGN TEAM
200502.00 — PROJECT NO.

Copyright © 2021, California Department of General Services: Real Estate Services Division

V2

ISSUE DATE: OCTOBER 28, 2026

RELATIVE BORDER SCALE IN INCHES 0 1 2 3

8/27/2025 10:10:05 AM C:\Users\all\OneDrive - Capitol\Documents\200502.00_Porterville_Staff_Residences_MP22_Central_A20v2.rvt

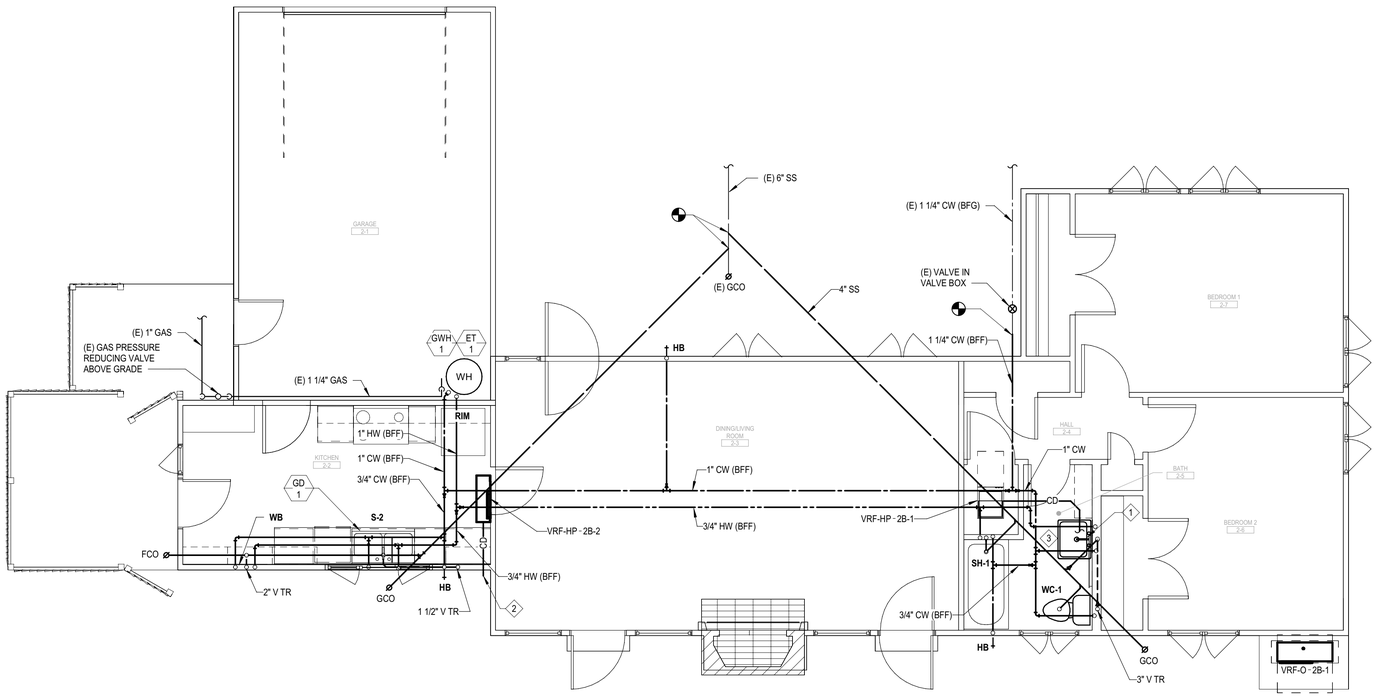

SHEET NOTES:

1. ALL DOMESTIC COLD WATER, DOMESTIC HOT WATER, SANITARY SEWER, AND GAS PIPING IS BELOW SLAB AND STUBS UP AT EACH FIXTURE/APPLIANCE UNLESS OTHERWISE NOTED.
2. ALL VENT PIPING IS ROUTED IN WALLS.

KEYNOTES:

1. DISCHARGE 3/4" CONDENSATE OUTSIDE AT 12" ABOVE FINISHED GRADE WITH DOWNWARD FACING ELBOW.
2. DISCHARGE 3/4" CONDENSATE TO LAV TAILPIECE.
3. CONNECT NEW PLUMBING BRANCH PIPING TO (E) BATHROOM SINK (REINSTALLED).

THE SCOPE OF WORK INVOLVED IN THIS PROJECT IS EXEMPT FROM THE DIVISION OF THE STATE ARCHITECT ACCESSIBILITY REQUIREMENTS IN ACCORDANCE WITH TITLE 24, CALIFORNIA CODE OF REGULATIONS, 2016 CALIFORNIA BUILDING CODE.

OFFICE OF THE STATE FIRE MARSHAL
APPROVED FIRE AND PANIC ONLY
01/21/26
25-3084
Approval of this plan does not authorize or approve any omission or deviation from applicable regulations. Final approval is subject to field inspection. One set of approved plans shall be available on the project site at all times.

GENERAL SERVICES
Department of General Services
Architecture & Engineering Sections
State of California
Real Estate Services Division
Project Management & Development Branch
707 Third Street, Suite 4-105
West Sacramento, California 95605

REGISTERED PROFESSIONAL ENGINEER
KEVIN D. STTLER
M 33498
EXPIRES 9/30/26
MECHANICAL
STATE OF CALIFORNIA

DATE SIGNED: 12/13/24

Issue		
No.	Date	Description

Project
STAFF RESIDENCES REHABILITATION

PORTERVILLE, CA 93257

DEVELOPMENTAL SERVICES

Supervisor	Designed	Drawn
Approver	Designer	Author

DSA App No.	SFM Permit No.
N/A	25-S-3084-C-DR

Sheet Title
2 BEDROOM (BLDG 104) PLUMBING PLAN

Project Number
000000000006803

Sheet Scale

Sheet Number
PA21

capital engineering
RANCHO CORDOVA, CALIFORNIA
JD - JH PM - DESIGN TEAM
200502.00 PROJECT NO.

1 2 BEDROOM (BLDG 104) PLUMBING PLAN — 1/4" = 1'-0"

ISSUE DATE: OCTOBER 28, 2026

Copyright © 2021, California Department of General Services, Real Estate Services Division

C:\Users\all\OneDrive - CapitalDocuments\200502.00_Porterville_Staff_Residences_MP22_Central_A\Revit\
8/27/2025 10:10:06 AM

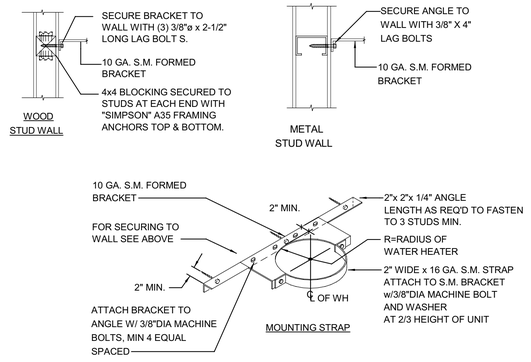

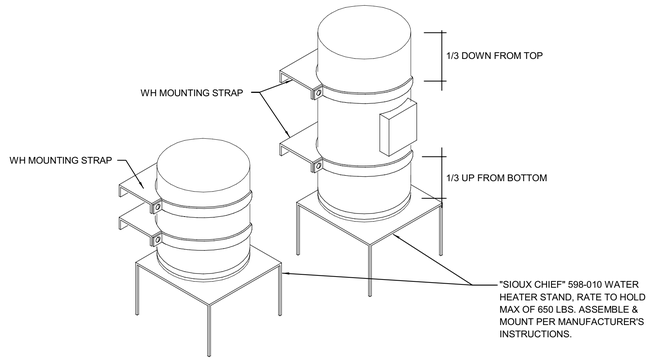

WATER HEATER MOUNTING - TANK

SCALE : NONE

1
P500

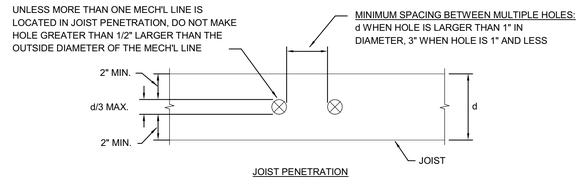

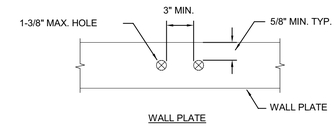

PENETRATIONS IN WOOD FRAMING

SCALE : NONE

2
P500

THE SCOPE OF WORK INVOLVED IN THIS PROJECT IS EXEMPT FROM THE DIVISION OF THE STATE ARCHITECT ACCESSIBILITY REQUIREMENTS IN ACCORDANCE WITH TITLE 24, CALIFORNIA CODE OF REGULATIONS, 2016 CALIFORNIA BUILDING CODE.

OFFICE OF THE STATE FIRE MARSHAL
APPROVED FIRE AND PANIC ONLY
01/21/26
25-3084
Approval of this plan does not authorize or approve any omission or deviation from applicable regulations. Final approval is subject to field inspection. One set of approved plans shall be available on the project site at all times.

Department of General Services
Architecture & Engineering Sections
State of California
Real Estate Services Division
Project Management & Development Branch
707 Third Street, Suite 4-105
West Sacramento, California 95605

REGISTERED PROFESSIONAL ENGINEER
KEVIN D. STTLER
M 33498
EXPIRES 9/30/26
MECHANICAL
STATE OF CALIFORNIA

DATE SIGNED: 12/13/24

Issue		
No.	Date	Description

Project
STAFF RESIDENCES REHABILITATION

PORTERVILLE, CA 93257

DEVELOPMENTAL SERVICES

Supervisor	Designed	Drawn
Approver	Designer	Author

DSA App No.	SFM Permit No.
N/A	25-S-3084-C-DR

Sheet Title
PLUMBING DETAILS

Project Number
000000000006803

Sheet Scale

Sheet Number
P500

capital engineering
RANCHO CORDOVA, CALIFORNIA
JD - JH PM - DESIGN TEAM
200502.00 PROJECT NO.

Copyright © 2021, California Department of General Services, Real Estate Services Division

V2

ISSUE DATE: OCTOBER 28, 2026

RELATIVE BORDER SCALE IN INCHES

8/27/2025 10:10:05 AM C:\Users\all\OneDrive - CapitalDocuments\200502.00_Porterville_Staff_Residences_MP22_Central_Alex\Cl.rvt

SYMBOLS LIST

SOME OF THESE SYMBOLS SHOWN MAY NOT BE USED ON THIS PROJECT

POWER DISTIBUTION

- SWITCHGEAR, SWITCHBOARD, DISTRIBUTION BOARD, SUBSTATION OR MOTOR CONTROL CENTER, FLOOR MOUNTED. DOUBLE LINE INDECATES FRONT FACE OF GEAR.
- PANELBOARD, 120/208V, SURFACE MOUNTED ON WALL.
- PANELBOARD, 120/208V, FLUSH MOUNTED IN WALL.
- ELECTRIC MOTOR, NIEC. MAKE POWER CONNECTIONS ONLY AS NOTED ON PLANS.
- (F) INDOOR EXHAUST FAN MOTOR, SINGLE PHASE. MAKE POWER CONNECTIONS TO INCLUDE JUNCTION BOX MOUNTED MANUAL MOTOR STARTER AND DISCONNECT ADJACENT TO FAN WITH 2 #12 CONDUCTORS PLUS GROUND IN 1/2" FLEXIBLE CONDUIT BETWEEN STARTER AND MOTOR.
- P PULLBOX OR HANDHOLE, SIZE AND TYPE AS NOTED ON PLANS.
- A AF SAFETY DISCONNECT SWITCH, 3 POLE, UON. ADJACENT NUMBER INDICATES FUSE SIZE WHEN APPLICABLE. LABELING CONVENTION AS FOLLOWS:

A:	30A, NON-FUSED	AF:	30A, FUSED
B:	60A, NON-FUSED	BF:	60A, FUSED
C:	100A, NON-FUSED	CF:	100A, FUSED
D:	200A, NON-FUSED	DF:	200A, FUSED
E:	400A, NON-FUSED	EF:	400A, FUSED
F:	600A, NON-FUSED	FF:	600A, FUSED
G:	800A, NON-FUSED	GF:	800A, FUSED

- 1 MAGNETIC MOTOR STARTER. ADJACENT NUMBER INDICATES NEMA SIZE OF STARTER.
- 1 COMBINATION MAGNETIC MOTOR STARTER WITH OVERCURRENT PROTECTION DISCONNECT. ADJACENT NUMBER INDICATES NEMA SIZE OF STARTER.
- PACKAGE MOTOR CONTROLLER OR STARTER FURNISHED AND INSTALLED UNDER ANOTHER DIVISION WITH EQUIPMENT CONTROLLED. PROVIDE SINGLE-POINT POWER SERVICE CONNECTION UNDER THIS DIVISION AS NOTED ON PLANS.
- DRIVEN GROUND ROD.
- DRIVEN GROUND ROD IN GROUND WELL WITH COVER.
- GROUP MOUNTED MOLDED CASE CIRCUIT BREAKER.
- M PRIVATE METER, MOUNTED INTEGRAL WITH OVERCURRENT PROTECTION OR SEPARATE WITHIN SWITCHGEAR.
- M PRIVATE METER, MOUNTED IN SEPARATE ENCLOSURE FROM SWITCHGEAR.
- CONNECTION TO GROUND.

WIRING DEVICES

- JUNCTION BOX, WALL MOUNTED, +18" UON.
- JUNCTION BOX, MOUNTED IN FLUSH FLOOR BOX.
- J JUNCTION BOX, MOUNTED FLUSH IN CEILING.
- J JUNCTION BOX, SURFACE OR PENDANT MOUNTED TO STRUCTURE IN ACCESSIBLE CEILING SPACE.
- JUNCTION BOX, MOUNTED ON CONDUIT STANCHION FLOOR PENETRATION, +12" UON.
- SINGLE-PLEX CONVENIENCE RECEPTACLE DEVICE, WALL MOUNTED, +18" UON.
- DUPLEX CONVENIENCE RECEPTACLE DEVICE, WALL MOUNTED, +18" UON. ADJACENT LETTERING DENOTED BELOW APPLY TO ALL RECEPTACLE DEVICES WHEN SHOWN ON DRAWINGS.
  - A: ARC FAULT CURRENT INTERRUPTER (AFCI)
  - G: GROUND FAULT CURRENT INTERRUPTER (GFCI)
  - IG: ISOLATED GROUND
  - U: INTEGRAL USB PORTS
  - WP: WEATHER-RESISTANT, GROUND FAULT CURRENT INTERRUPTER (GFCI) WITH WEATHERPROOF "IN USE" COVER
- DOUBLE DUPLEX CONVENIENCE RECEPTACLE DEVICE, WALL MOUNTED, +18" UON.
- DUPLEX CONVENIENCE RECEPTACLE DEVICE, WALL MOUNTED OVER COUNTER, 6" ABOVE BACK SPLASH UON, BUT NO HIGHER THAN ADA REQUIREMENTS.
- DUPLEX CONVENIENCE RECEPTACLE DEVICE, SPLIT-WIRED, WALL MOUNTED, +18" UON.
- SPECIALTY OUTLET DEVICE, NEMA CONFIGURATION TYPE AS NOTED ON PLANS, WALL MOUNTED, +18" UON.
- DUPLEX CONVENIENCE RECEPTACLE DEVICE, MOUNTED FLUSH IN CEILING.
- S^T SINGLE-POLE, MANUAL DISCONNECT SWITCH WITH THERMAL OVERLOAD ELEMENT, MOUNTED ADJACENT TO MOTOR.

TELECOMMUNICATIONS

- TELECOMMUNICATION DEVICE, 1 CAT6 DATA DROP UON, WALL MOUNTED, +18" UON.
- TELECOMMUNICATION DEVICE, 1 CAT6 DATA DROP UON, WALL MOUNTED +42" OR 6" ABOVE BACK SPLASH, UON, BUT NO HIGHER THAN ADA REQUIREMENTS.
- V TELEPHONE JACK, WALL MOUNTED, +18" UON. 1 CAT 5E CABLE FROM DEVICE TO TELEPHONE WIRING BLOCK IN GARAGE.
- TELEVISION JACK, WALL MOUNTED +18" UON.

LIGHTING CONTROL

- S SINGLE-POLE, SINGLE-THROW SWITCH, WALL MOUNTED, +42" UON.
- S^3 THREE-WAY SWITCH, WALL MOUNTED, +42" UON.
- S^D WALL BOX DIMMER SWITCH, +42" UON. SIZED PER CONNECTED LOAD ON PLANS AND FURNISHED FOR LAMP SOURCE SERVED. PROVIDED FOR DE-RATING WHEN INSTALLED GANGED LOCATIONS.
- S^{TC} SINGLE-POLE, TIMER CONTROLLED SWITCH, WALL MOUNTED, +42" UON.
- D SINGLE ZONE DIMMER SWITCH WITH ON/OFF/DIM CAPABILITIES, WALL MOUNTED, +42" UON.
- S SINGLE ZONE SWITCH WITH ON/OFF CAPABILITIES, WALL MOUNTED, +42" UON.
- M OCCUPANCY SENSOR, CEILING MOUNTED FOR AREA COVERAGE.
- M LIGHTING CONTROL OCCUPANCY SENSOR WITH SINGLE LEVEL SWITCHING, WALL MOUNTED, +42" UON.

CONVENTIONS

- (1) NUMBERED NOTE, APPLIES TO ALL DRAWINGS.
- 1 NUMBERED SHEET NOTE, APPLIES TO DRAWING CONTAINING NOTES ONLY.
- (1) OVERCURRENT PROTECTIVE DEVICE SPACE IDENTIFICATION TAG. REFERS TO LOCATION OF PROTECTIVE OR CONTROL DEVICE WITHIN SWITCHBOARDS, DISTRIBUTION BOARDS, MOTOR CONTROL CENTERS, ETC.
- (NAME) EQUIPMENT IDENTIFICATION TAG: ITEM FURNISHED AND INSTALLED UNDER ANOTHER SECTION AND WIRED UNDER THIS SECTION.
- 2004 FEEDER SIZE. REFER TO FEEDER SCHEDULE.
- 1 / E-801 DETAIL REFERENCE:
  - DETAIL DESIGNATION
  - SHEET NUMBER
- 2 - F3 FIXTURE IDENTIFICATION TAG:
  - FIXTURE TYPE
  - QUANTITY

RACEWAYS

- CONDUIT RUN CONCEALED IN SLAB, UNDER SLAB OR UNDERGROUND.
- CONDUIT RUN CONCEALED IN WALL OR ABOVE CEILING.
- CONDUIT HOMERUN, CONTINUOUS RUN TO PANEL OR EQUIPMENT CABINET. HOMERUN CAN OCCUR ON ANY OF THE ABOVE ROUTING CONDITIONS.
- CONDUIT TURNED UP, CAN OCCUR ON ANY OF THE ABOVE ROUTING CONDITIONS.
- CONDUIT TURNED DOWN, CAN OCCUR ON ANY OF THE ABOVE ROUTING CONDITIONS.
- CONDUIT CAPPED OR STUBBED WITH INSULATED BUSHINGS, CAN OCCUR ON ANY OF THE ABOVE ROUTING CONDITIONS.
- CONDUIT SLEEVE, WITH INSULATING BUSHINGS.
- FLEXIBLE METALLIC CONDUIT, EQUIPMENT CONNECTION.
- CROSSMARKS ON BRANCH CIRCUIT CONDUIT RUNS INDICATE THE QUANTITY OF CONDUCTORS AS FOLLOWS (GROUND CONDUCTORS ARE NOT NOTED, BUT SHOULD BE INCLUDED IN EVERY CONDUIT WITH POWER CONDUCTORS):
  1. NO CROSSMARKS INDICATES TWO #12 AWG CONDUCTORS, UON.
  2. THREE TO SIX CROSSMARKS INDICATES THE QUANTITY OF #12 AWG CONDUCTORS, UON.
  3. SEVEN OR MORE CROSSMARKS INDICATES THE QUANTITY OF #10 AWG CONDUCTORS, UON.

LIGHTING

- LUMINAIRE, RECESSED IN CEILING.
- LUMINAIRE, SURFACE OR PENDANT MOUNTED.
- LUMINAIRE, WALL MOUNTED.
- STRIP LUMINAIRE, SURFACE OR PENDANT MOUNTED.
- ROUND DOWNLIGHT LUMINAIRE, RECESSED IN CEILING.
- SQUARE DOWNLIGHT LUMINAIRE, RECESSED IN CEILING.
- DOWNLIGHT, SURFACE OR PENDANT MOUNTED.
- DECORATIVE LUMINAIRE, PENDANT MOUNTED.
- SINGLE-HEAD AREA LUMINAIRE WITH BRACKET ARM AND POLE, MOUNTED TO CONCRETE BASE.
- AREA LUMINAIRE, SURFACE OR RECESSED MOUNTED TO WALL.

FIRE ALARM

- COMBINATION SMOKE/CO DETECTOR INITIATING DEVICE, 120V WITH 10 YEAR BATTERY, STRUCTURE MOUNTED TO SURFACE JUNCTION BOX. SENSORS SHALL INTERCONNECT WIRELESSLY WITH OTHER SENSORS IN THE SAME UNIT.

ABBREVIATIONS

A	AMPERES	MCB	MAIN CIRCUIT BREAKER
AFI	ARC FAULT CIRCUIT INTERRUPTER	MLO	MAIN LUGS ONLY
AF	AMPERE OVERCURRENT FRAME SIZE (WHEN APPLIED TO CIRCUIT BREAKERS) OR AMPERE FUSE SIZE (WHEN APPLIED TO FUSES)	MT	EMPTY
		(N)	NEW
		NTS	NOT TO SCALE
AFF	ABOVE FINISHED FLOOR	PNL	PANEL
AIC	ASYMMETRIC INTERRUPTING CURRENT	PVC	POLYVINYL CHLORIDE
AL	ALUMINUM	(R)	EXISTING TO BE REMOVED
AT	AMPERE OVERCURRENT TRIP (WHEN APPLIED TO CIRCUIT BREAKERS)	(RR)	REMOVE AND RELOCATE
		TC	TIME CLOCK
C	CONDUIT	TP	TWISTED-PAIR
CEC	CALIFORNIA ELECTRICAL CODE	TX	TRANSFORMER
CP	CIRCULATION PUMP	TYP	TYPICAL
CU	COPPER	UON	UNLESS OTHERWISE NOTED
(E)	EXISTING TO REMAIN	V	VOLTS
EF	EXHAUST FAN	VA	VOLTS-AMPS
EMT	ELECTRICAL METALLIC TUBING	VFD	VARIABLE FREQUENCY DRIVE
EWH	ELECTRIC WATER HEATER	WAP	WIRELESS ACCESS POINT
F	FUSED	WP	WEATHERPROOF
(F)	FUTURE	1Ø	1-PHASE
FLA	FULL LOAD AMPERES	3Ø	3-PHASE
FMC	FLEXIBLE METAL CONDUIT	1P	1-POLE
G	GROUND	2P	2-POLE
GB	GROUND BUS	3P	3-POLE
GFCI	GROUND FAULT CIRCUIT INTERRUPTER	3W	3-WIRE
GND	GROUND	4W	4-WIRE
GRC	GALVANIZED RIGID CONDUIT		
IMC	INTERMEDIATE METAL CONDUIT		

APPLIANCES

DW	DISHWASHER	GR	GAS RANGE
ED	ELECTRIC DRYER	MW	MICROWAVE
EO	ELECTRIC OVEN/RANGE	RF	REFRIGERATOR
GD	GARBAGE DISPOSER	WM	WASHING MACHINE

ELECTRICAL SHEET INDEX

SHEET NO.	SHEET NAME
E001	SYMBOLS LIST AND SHEET INDEX
E002	SCHEDULES, NOTES & ABBREVIATIONS
E101	OVERALL SITE PLAN
EA10	DEMOLITION PLAN - 2 BEDROOM
EA11	ELECTRICAL PLAN - 2 BEDROOM - 104 ORANGE
E300	POWER ONE LINE DIAGRAM & DETAILS

THE SCOPE OF WORK INVOLVED IN THIS PROJECT IS EXEMPT FROM THE DIVISION OF THE STATE ARCHITECT ACCESSIBILITY REQUIREMENTS IN ACCORDANCE WITH TITLE 24, CALIFORNIA CODE OF REGULATIONS, 2016 CALIFORNIA BUILDING CODE.

REVIEWED FOR EXEMPTION

GENERAL SERVICES

Department of General Services
Architecture & Engineering Sections
State of California
Real Estate Services Division
Project Management & Development Branch
707 Third Street, Suite 4-105
West Sacramento, California 95605

The Engineering Enterprise
CONSULTING ENGINEERS

REGISTERED PROFESSIONAL ENGINEER
JEG15494
Exp. 06/2027
SCOTT WHEELER
ELECTRICAL
STATE OF CALIFORNIA

Date Signed: 08-27-2025

Issue No.	Date	Description
1	02/05/2021	SFM REVIEW CORRECTION
2	7/14/23	50% PROGRESS SET
3	09/15/23	95% WORKING DRAWINGS

Project

DEVELOPMENT SERVICES

Supervisor	Designed	Drawn
Approver	Designer	Author

DSA App No.	SFM Permit No.
N/A	25-S-3084-C

Sheet Title

SYMBOLS LIST AND SHEET INDEX

Project Number

000000000006803

Sheet Scale

Sheet Number

E001

Copyright © 2021, California Department of General Services: Real Estate Services Division

C:\Users\tyler\Documents\PSR_ELEC_CENTRAL_2BR_r22_tyler@engent.com.rvt

8/28/2025 8:21:31 AM

RELATIVE BORDER SCALE IN INCHES

ISSUE DATE: OCTOBER 28, 2026

LUMINAIRE SCHEDULE

TYPE	MANUFACTURER CATALOG NUMBER	DESCRIPTION	LIGHT SOURCE	WATTAGE	VOLTAGE	DETAIL
F1	LITHONIA CLX-L48-5000LM-SEF-WDL-WD-MVOLT-30K-80CRI-WH OR APPROVED EQUAL	4' x 8.5" LED SURFACE MOUNT STRIP LIGHT WITH WRAPAROUND LENS. 3500K COLOR TEMPERATURE, 80CRI.	LED 5000 LUMENS 3000K 80+CRI	35 W	120 V	4/E301
F2	JUNO SLIMFORM SQUARE JSF-7IN-10LM-30K-90CRI-MVOLT-ZT-WH OR APPROVED EQUAL	NOMINAL 7" SQUARE SLIM SURFACE MOUNTED LED FIXTURE INSTALLED OVER JUNCTION BOX, WITH WHITE PAINTED FINISH AND DIFFUSED LENS. INSTALL PER MANUFACTURER'S INTALLATION INSTRUCTIONS TO MAINTAIN WET LOCATION LISTING.	LED 1000 LUMENS 3000K 90+CRI	13 W	120 V	4/E301
F3	LITHONIA 6JBK-SQ-30K-90CRI-MW OR APPROVED EQUAL	RECESSED LED DOWNLIGHT, WIDE BEAM ANGLE, 6" SQUARE, IC RATED. WHITE FINISH. WET LOCATION LISTED, APPLY SILICONE AROUND PERIMETER OF FLANGE WHERE INSTALLED IN WET LOCATIONS.	LED 770 LUMENS 3000K 90+CRI	10.7 W	120 V	3/E301
F4	LITHONIA FMVCSL-24-MVOLT-30K-90CRI-BN OR APPROVED EQUAL	CONTEMPORARY SQUARE LED VANITY LIGHT WITH ACRYLIC DIFFUSER AND BRUSHED NICKEL HOUSING. 24" LENGTH, WALLMOUNT ABOVE MIRROR.	LED 1304 LUMENS 3000K 90+CRI	26 W	120 V	5/E301
F5	BIG ASS FANS "HAIKU" S3127-20-BCS-0402-C-01 (FAN) WITH SATIN NICKEL LIGHT KIT OR APPROVED EQUAL	CEILING FAN, WITH INTEGRAL LIGHT KIT. ELECTRICAL CHARACTERISTICS NOTED ARE FOR LIGHT FIXTURE ONLY. VERIFY FAN SIZE AND ALL FINISHES WITH STATE.	LED 1280 LUMENS 2700K 85+CRI	38 W	120 V	
F6	VONN VMC31620-AL OR APPROVED EQUAL	LED DECORATIVE PENDANT FIXTURE.	LED 2300 LUMENS 3000K 80+ CRI 50,000 HR L70	38 W	120 V	
F7	PHILIPS LIGHTOLIER SLIMSURFACE S7R-830K-10-W OR APPROVED EQUAL	SURFACE MOUNT ROUND DOWNLIGHTS CENTERED ON EACH WINDOW SECTION IN KITCHEN. CONCEAL WIRING IN CABINET. REFER TO ARCHITECTURAL DRAWINGS FOR MOUNTING LOCATION.	LED 1000 LUMENS 3000K	11 W	120 V	4/E301
F8	JUNO UNDERCABINET LIGHTING USTL1-30K-80CRI-BL WITH MAGXFMR 1C 60W 120 12AC BL OR APPROVED EQUAL	SURFACE MOUNT UNDERCABINET PUCK LIGHTS WITH BLACK FINISH. LIGHTS OPERATE ON 12V. PROVIDE SINGLE 120V-12V TRANSFORMER FOR ALL SIX FIXTURES IN EACH UNIT. REFER TO ARCHITECTURAL DRAWINGS FOR EXACT LOCATION OF EACH FIXTURE.	LED 286 LUMENS 3000K	3.8 W	120 V	
SF1	LITHONIA LIGHTING OLCFM OLCFM-15-DDB OR APPROVED EQUAL	EXTERIOR, LED, ROUND CAST SURFACE MOUNT FIXTURE. MADE OF A RUGGED CAST-ALUMINUM TOP PLATE AND OUTER RING WITH PWDER COAT FINISH AND POLYCARBONATE LENS COVER. 4000K COLOR TEMP.	LED 1000 LUMENS 4000K 85+CRI	16.6 W	120 V	4/E301
SF2	LITHONIA OLF OLF 2RH MO OR APPROVED EQUAL	EXTERIOR WALLPACK SECURITY TYPE FIXTURE. INCLUDES INTEGRAL MOTION SENSOR. 4000K COLOR TEMPERATURE. MOUNT AT +8'AFF, UON.	LED 3100 LUMENS 4000K	25 W	120 V	5/E301
SF3	CALCUTTA CA BGP LED CAB-L20.0-ZE550-120-277V-0-10V DIMMING-BZ-40K-PCL OR APPROVED EQUAL	EXTERIOR WALLPACK. MOUNTED AT +8'AFF UON. DIE CAST ALUMINUM HOUSING WITH POWDER COAT FINISH, PRISMATIC GLASS LENS. INCLUDES PHOTOCELL. 4000K COLOR TEMPERATURE.	LED 1800 LUMENS 4000K	20 W	120 V	5/E301

PROJECT GENERAL NOTES

#	Note
***	EXISTING CONDITIONS
1	THE EXISTING CONDITIONS INDICATED IN THIS DRAWING SET WERE DEVELOPED FROM VARIOUS SOURCES WHICH WERE NOT ALL FIELD VERIFIED AND NOT ALL CONDITIONS ARE SHOWN. LOCATIONS, ROUTING, ELEVATIONS, SIZES, ETC. ARE SHOWN SCHEMATICALLY. CONTRACTOR SHALL VERIFY EXISTING CONDITIONS PRIOR TO CONSTRUCTION.
2	DRAWINGS INDICATE GENERAL ARRANGEMENT OF SYSTEMS AND WORK. FOLLOW DRAWINGS IN LAYING OUT WORK AND CHECK DRAWINGS OF OTHER TRADES TO VERIFY SPACE CONDITIONS. FINAL LOCATIONS SHALL BE ADJUSTED TO MEET FIELD CONDITIONS
3	THE CONTRACTOR SHALL VISIT THE JOBSITE AND VERIFY ALL EXISTING CONDITIONS BEFORE CONSTRUCTION AND SHALL INCLUDE IN THE BID THE NECESSARY COSTS TO CONSTRUCT THIS PROJECT IN ACCORDANCE WITH THE ELECTRICAL DRAWINGS, SPECIFICATIONS AND ALL APPLICABLE CODES.
***	DEMO & GENERAL CONDITIONS
4	CONTRACTOR SHALL REMOVE ALL LEFT OVER CONDUIT, WIRE, SCRAPS, ETC. AND LEAVE PREMISES CLEAN AND FREE OF TRASH OR DEBRIS RESULTING FROM THEIR WORK.
5	CONTRACTOR SHALL DISCONNECT AND REMOVE ALL DEMOLISHED DEVICES AND FIXTURES AS SHOWN ON DEMOLITION PLAN. TURN OVER TO OWNER EXISTING DEVICES AND FIXTURES THAT ARE NOT REUSED. PROPERLY DISCARD IF THE OWNER DOES NOT WANT.
6	RECONNECT EXISTING DEVICES WHOSE CIRCUITS HAVE BEEN INTERRUPTED BY DEMOLITION BY PROVIDING NEW CONNECTIONS TO ANOTHER EXISTING DEVICE OR PANEL. VERIFY CIRCUIT LOADING ON EXISTING CIRCUIT.
7	WHEN A DEVICE IS REMOVED FROM AN EXISTING WALL WHICH WILL REMAIN, PATCH WALL TO MATCH EXISTING OR NEW FINISH.
8	MOUNTING HEIGHTS SHOWN ARE FROM FINISHED FLOOR TO THE CENTERLINE OF DEVICES, COORDINATE WITH ARCHITECTURAL DRAWINGS.
***	EQUIPMENT, CONDUIT, WIRE, BOXES & DEVICES
9	PROVIDE INDIVIDUAL GFCI RECEPTACLES AT EACH LOCATION SHOWN, DO NOT USE FEED-THRU GFCI TYPE RECEPTACLES. LOCATE RECEPTACLE AT END OF A BRANCH CIRCUIT WIRE
10	WHERE RECEPTACLES ARE LOCATED OUTSIDE OR IN WET/DAMP LOCATIONS PROVIDE WEATHER RESISTANT TYPE, UON.
11	WHERE USED, CONDUIT SIZE SHALL BE 0.50 MINIMUM, U.O.N.
12	ALL CONDUCTORS ON THIS PROJECT SHALL BE COPPER.
13	INSTALL AND CONNECT A CODE SIZED INSULATED OR BARE COPPER GROUNDING CONDUCTOR IN ALL BRANCH CIRCUITS AND FEEDERS.
14	PROVIDE INSULATING BUSHINGS OR INSULATED THROAT ON THE ENDS OF ALL EMPTY CONDUIT SLEEVES AND INSTALL A POLYETHYLENE PULLING ROPE.
15	WHERE CIRCUITS ARE SHOWN ON THE DRAWINGS WITH HOMERUNS THAT SHARE NEUTRAL CONDUCTORS THE CONTRACTOR SHALL PROVIDE HANDLE TIES BETWEEN ALL BRANCH CIRCUIT BREAKER LOADS WHICH SHARE A NEUTRAL.
16	ALL OUTDOOR ELECTRICAL EQUIPMENT SHALL BE WEATHER-PROTECTED AND LISTED FOR EXTERIOR USE.
17	PROVIDE TYPE WRITTEN PANEL SCHEDULES UPDATED TO INCLUDE ALL FIELD MODIFICATIONS AND SCOPE ITEMS ASSOCIATED WITH THIS PROJECT.
18	PROVIDE ENGRAVED NAMEPLATES FOR ELECTRICAL BOARDS AND DISCONNECTS.
19	19. UTILIZE TYPE NM CABLE FOR ALL CONCEALED WIRING.
***	CODE REQUIREMENTS & ELECTRICAL CLEARANCES
20	ALL ELECTRICAL WORK SHALL COMPLY WITH THE LATEST EDITION OF THE CALIFORNIA ELECTRICAL CODE (CEC).
21	CONTRACTOR IS RESPONSIBLE TO SUBMIT REVISED LAYOUT OF EQUIPMENT IN ELECTRICAL SPACES FOR WRITTEN APPROVAL BY ENGINEER IF PROPOSED INSTALLATION LAYOUT DIFFERS FROM CONSTRUCTION DOCUMENTS. SUBMISSION MUST BE APPROVED PRIOR TO RELEASE OF ORDER FOR EQUIPMENT AND PRIOR TO INSTALLATION.
22	REQUIRED ELECTRICAL EQUIPMENT WORKING SPACE DEPTH SHALL NOT BE LESS THAN THAT INDICATED IN CEC TABLE 110.26. THE WIDTH OF THE WORKING SPACE IN FRONT OF THE ELECTRICAL EQUIPMENT SHALL BE THE WIDTH OF THE EQUIPMENT OR 30", WHICHEVER IS GREATER. THIS REQUIREMENT ALSO APPLIES TO DISCONNECT SWITCHES.
23	ALL ELECTRICAL MATERIALS AND EQUIPMENT SHALL BE LISTED BY UNDERWRITERS LABORATORIES AND BEAR THEIR LABEL, OR ETL.
24	WIRING SPACE IN PANELBOARDS SHALL BE DEDICATED TO CONDUCTORS TERMINATED IN THAT ENCLOSURE. PANELBOARDS SHALL NOT BE USED AS PULL AND/OR SPLICE BOXES FOR CONDUCTORS THAT TERMINATE IN OTHER ENCLOSURES. DO NOT SPLICE CONDUCTORS IN EQUIPMENT.
***	COORDINATION
25	REFER TO MECHANICAL & PLUMBING DRAWINGS FOR EXACT LOCATIONS OF EQUIPMENT. PROVIDE ALL LINE VOLTAGE AND LOW VOLTAGE WIRING, CONTROL WIRING, INTERLOCK CABLING, AND CONDUIT REQUIRED.
26	PROVIDE A DISCONNECTING MEANS AT ALL MOTORS, WHETHER INDICATED ON THE PLANS OR NOT.
27	PROVIDE FUSES IN DISCONNECTS FOR MECHANICAL EQUIPMENT AS COORDINATED WITH THE UNITS NAMEPLATE AND MANUFACTURERS INSTALLATION INSTRUCTIONS. FUSES SHALL BE CURRENT LIMITING TYPE.
28	WORK PERFORMED FROM THESE DRAWINGS SHALL ALSO COMPLY WITH THE PROJECT SPECIFICATIONS. IN THE EVENT THAT THERE IS A CONFLICT BETWEEN THE DRAWINGS AND SPECIFICATIONS, THE MORE STRINGENT REQUIREMENT SHALL TAKE PRECEDENT.
29	CONTRACTOR SHALL CONFIRM THAT ALL LIGHTING FIXTURES SPECIFIED, AND THE CEILING TYPES, FIXTURE TRIMS, AND FRAMES ARE ALL COMPATIBLE PRIOR TO THE CONTRACTOR LIGHTING FIXTURE SUBMITTAL.
***	MISCELLANEOUS
30	CONTRACTOR SHALL PREPARE RED LINED AS-BUILT DOCUMENTS REPRESENTING THE ACTUAL FIELD ROUTINGS AND INSTALLATION LOCATIONS FOR ALL ITEMS ON THIS PROJECT.
31	SURFACE MOUNTED CONDUIT WHERE APPROVED, AND INSTALLED, SHALL BE PAINTED TO MATCH THE ARCHITECTURAL FINISHES IN THAT AREA.
32	CONDUIT ROUTING (WHERE SHOWN) IS ESSENTIALLY DIAGRAMMATIC. CONTRACTOR SHALL LAYOUT RUNS TO SUIT FILED CONDITIONS AND THE COORDINATION REQUIREMENTS OF OTHER TRADES.
33	BRANCH CIRCUITS AND CABLE SUPPORTS ROUTED IN DIMISING WALLS SHALL ONLY BE SUPPORTED OF STUDS ASSOCIATED WITH THE UNIT THEY ARE SERVING.
34	WHERE DEVICES IN UNITS ARE SHOWN BACK TO BACK PROVIDE 24" BETWEEN DEVICES SEPARATED BY A STUD. NOTIFY THE ARCHITECT IF THIS CRITERIA WILL RESULT IN ADDITIONAL OUTLETS REQUIRED TO MEET NEC SPACING REQUIREMENTS.
35	WHEN SWITCHES AND OUTLETS ARE WITHIN 12" OF EACH OTHER ALIGN VERTICALLY.
36	ALL DEVICES SHOWN TOGETHER SHALL BE GANGED TOGETHER, WHENEVER POSSIBLE.
37	WHERE DEVICES ARE SHOWN NEXT TO EACH OTHER WITH DIFFERENT MOUNTING HEIGHTS, THEY SHALL ALIGN VERTICALLY.
38	PROVIDE ARC-FAULT CIRCUIT INTERRUPTOR (AFCI), COMBINATION TYPE PROTECTION ON BRANCH CIRCUITS SERVING OUTLETS IN DWELLING UNITS EXCEPT IN BATHROOMS, GARAGE, UNFINISHED BASEMENT, AND CRAWL SPACE.

THE SCOPE OF WORK INVOLVED IN THIS PROJECT IS EXEMPT FROM THE DIVISION OF THE STATE ARCHITECT ACCESSIBILITY REQUIREMENTS IN ACCORDANCE WITH TITLE 24, CALIFORNIA CODE OF REGULATIONS, 2016 CALIFORNIA BUILDING CODE.

REVIEW FOR EXEMPTION

GENERAL SERVICES

Department of General Services
Architecture & Engineering Sections
State of California
Real Estate Services Division
Project Management & Development Branch
707 Third Street, Suite 4-105
West Sacramento, California 95605

The Engineering Enterprise
CONSULTING ENGINEERS

REGISTERED PROFESSIONAL ENGINEER #E01549 Exp. 06/30/27 SCOTT WHEELER ELECTRICAL STATE OF CALIFORNIA

Date Signed: 08-27-2025

Issue

No.	Date	Description
2	7/14/23	50% PROGRESS SET
3	09/15/23	95% WORKING DRAWINGS

Project

DEVELOPMENT SERVICES

Supervisor	Designed	Drawn
Approver	Designer	Author

DSA App No.	SFM Permit No.
N/A	25-S-3084-C

Sheet Title

SCHEDULES, NOTES & ABBREVIATIONS

Project Number

000000000006803

Sheet Scale

Sheet Number

E002

Copyright © 2021, California Department of General Services- Real Estate Services Division V1

RELATIVE BORDER SCALE IN INCHES 0 1 2 3

ISSUE DATE: OCTOBER 28, 2026

8/28/2025 8:21:32 AM C:\Users\tyler\Documents\PSR_ELEC_CENTRAL_2BR_r22_tyler@engent.com.rvt

24 x 36

NUMBERED SHEET NOTES

1 SEE POWER ONE LINE DIAGRAM ON SHEET E300 FOR INFORMATION ON FEEDER TO BUILDING 104.

GENERAL SHEET NOTES

A. ALL EXISTING SITE TELECOM PATHWAYS ARE EXISTING TO REMAIN.

THE SCOPE OF WORK INVOLVED IN THIS PROJECT IS EXEMPT FROM THE DIVISION OF THE STATE ARCHITECT ACCESSIBILITY REQUIREMENTS IN ACCORDANCE WITH TITLE 24, CALIFORNIA CODE OF REGULATIONS, 2016 CALIFORNIA BUILDING CODE.



1 OVERALL SITE PLAN

SCALE: 1" = 50'-0"

DGS GENERAL SERVICES

Department of General Services
Architecture & Engineering Sections
State of California
Real Estate Services Division
Project Management & Development Branch

707 Third Street, Suite 4-105
West Sacramento, California 95605

The Engineering Enterprise
CONSULTING ENGINEERS

REGISTERED PROFESSIONAL ENGINEER #E015450 Exp. 06-30-27 SCOTT WHEELER ELECTRICAL STATE OF CALIFORNIA

Date Signed: 08-27-2025

Issue No.	Date	Description
1	02/05/2021	SFM REVIEW CORRECTION
2	7/14/23	50% PROGRESS SET
3	09/15/23	95% WORKING DRAWINGS

Project

DEVELOPMENT SERVICES

Supervisor	Designed	Drawn
Approver	Designer	Author

DSA App No.	SFM Permit No.
N/A	25-S-3084-C

Sheet Title

OVERALL SITE PLAN

Project Number

000000000006803

Reference North | Sheet Scale

Sheet Number

E101

Copyright © 2021, California Department of General Services- Real Estate Services Division

ISSUE DATE: OCTOBER 28, 2026

C:\Users\tyler\Documents\PSR_ELEC_CENTRAL_2BR_r22_tyler@engent.com.rvt
8/28/2025 8:21:32 AM

RELATIVE BORDER SCALE IN INCHES

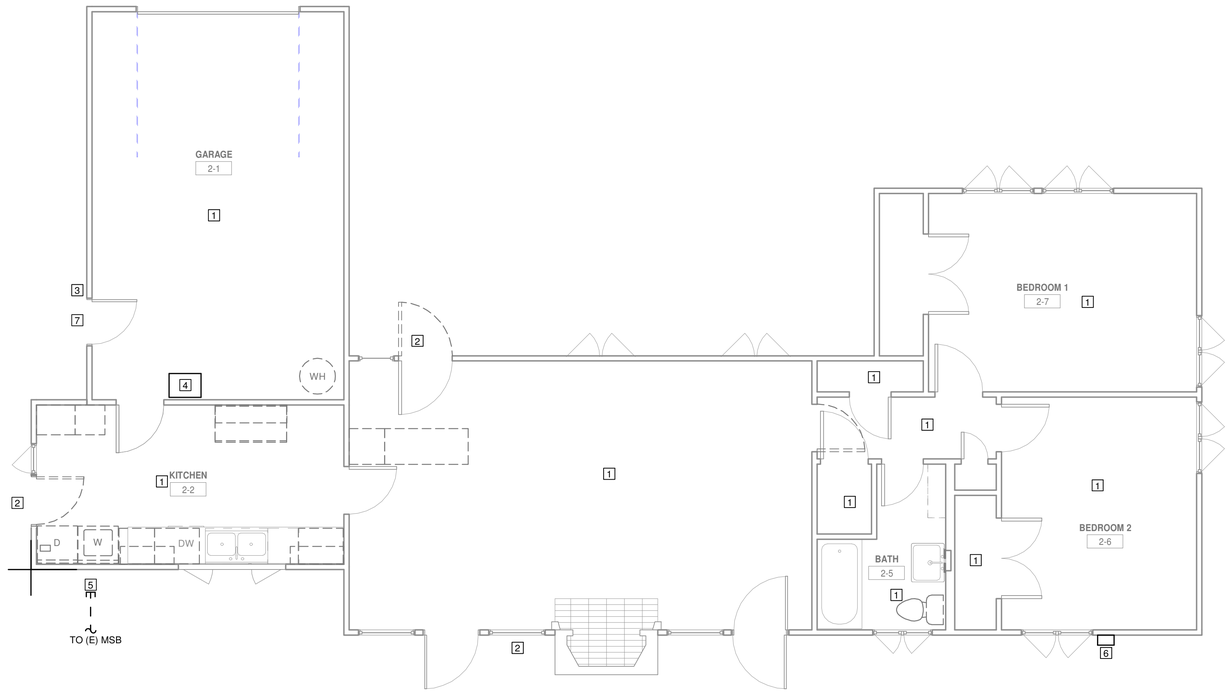

1 DEMOLITION PLAN - 2 BEDROOM

SCALE: 1/4" = 1'-0"

GENERAL SHEET NOTES

A. REFER TO SPECIFICATION 260090, SELECTIVE ELECTRICAL DEMOLITION, FOR ADDITIONAL REQUIREMENTS. ALL ELECTRICAL DEVICES AND WIRING SHALL BE DEMOED UNLESS OTHERWISE NOTED.

B. CONTRACTOR SHALL VISIT THE SITE PRIOR TO BID TO BECOME FAMILIARIZED WITH THE PROJECT SITE AND EXISTING CONDITIONS.

C. REFER TO ARCHITECTURAL DEMOLITION PLANS TO COORDINATE SCOPE OF DEMOLITION.

D. REFER TO MECHANICAL AND PLUMBING DEMOLITION PLANS AND REMOVE DISCONNECTS, CONDUIT, WIRE, BOXES, ETC. AT EQUIPMENT TO BE REMOVED.

E. DISCONNECT AND REMOVE ALL EXISTING DEVICES AND FIXTURES WITHIN THE AREA OF DEMOLITION U.O.N. AT THE OWNER'S DISCRETION, TURN OVER ANY EXISTING RE-USABLE OR RECYCLABLE MATERIAL. PROPERLY DISPOSE OF ANY UNWANTED MATERIALS.

F. DEVICES, EQUIPMENT, ETC. SHOWN TO BE DEMOLISHED ON THIS PLAN DOES NOT NECESSARILY REPRESENT THE ENTIRE SCOPE OF ELECTRICAL DEMOLITION; REFER TO NUMBERED SHEET NOTES FOR ADDITIONAL DEMOLITION REQUIREMENTS.

G. WHERE DEVICES OR FIXTURES ARE REMOVED, THE CONTRACTOR SHALL ALSO REMOVE ALL CONDUCTORS OR CABLE SERVING THE DEVICE, BACK TO SOURCE EQUIPMENT, OR NEAREST DEVICE TO REMAIN.

NUMBERED SHEET NOTES

1. AREA OF DEMOLITION:
   A. REMOVE ALL EXISTING INTERIOR LIGHTING AND LIGHTING CONTROL DEVICES, INCLUDING ALL BRANCH CIRCUIT CONDUIT AND WIRING. RECYCLE EXISTING LAMPS AND BALLASTS PER EPA GUIDELINES.
   B. REMOVE ALL EXISTING POWER DEVICES UON, INCLUDING ALL RECEPTACLES AND EQUIPMENT CONNECTIONS, AND REMOVE ALL BRANCH CIRCUITING.
   C. REMOVE EXISTING DATA AND TELEPHONE CABLING BACK TO THE EXISTING IDF CABINET.
   D. REMOVE ALL FIRE ALARM DEVICES.
2. REMOVE ALL EXISTING EXTERIOR LIGHTING FROM AND LIGHTING CONTROL DEVICES FROM BUILDING, INCLUDING ALL BRANCH CIRCUIT CONDUIT AND WIRING. RECYCLE EXISTING LAMPS AND BALLASTS PER EPA GUIDELINES.
3. REMOVE ALL EXTERIOR RECEPTACLES AND EQUIPMENT CONNECTIONS, INCLUDING BRANCH CIRCUITING.
4. EXISTING NETWORK SWITCH AND INCOMING COPPER CABLING TO REMAIN. REFER TO ELECTRICAL SHEET EA11 FOR EXACT LOCATIONS AND INSTRUCTIONS. REMOVE ALL EXISTING INTERIOR CABLING BACK TO SWITCH.
5. REMOVE EXISTING SERVICE FEEDER AND STUB CONDUIT TO JUST OUTSIDE OF BUILDING DURING DEMO PHASE. REMOVE ALL CONDUIT AND WIRING FROM EXTERIOR WALL, ROOF, AND INTERIOR OF BUILDING. REMOVE AERIAL WIRING EQUIPMENT FROM ROOF. INCOMING TELECOM CABLING AND PATHWAY TO THE NETWORK SWITCH IS EXISTING TO REMAIN. REMOVE ALL SATELLITES AND WIRING FROM ROOF.
6. EXISTING TELEPHONE SERVICE TO REMAIN FOR USE WITH NEW WORK. REMOVE ALL INTERIOR CABLING BACK TO EXTERIOR BOX.

THE SCOPE OF WORK INVOLVED IN THIS PROJECT IS EXEMPT FROM THE DIVISION OF THE STATE ARCHITECT ACCESSIBILITY REQUIREMENTS IN ACCORDANCE WITH TITLE 24, CALIFORNIA CODE OF REGULATIONS, 2016 CALIFORNIA BUILDING CODE.

REVISED FOR EXHIBIT

GENERAL SERVICES
Department of General Services
Architecture & Engineering Sections
State of California
Real Estate Services Division
Project Management & Development Branch
707 Third Street, Suite 4-105
West Sacramento, California 95605

The Engineering Enterprise
CONSULTING ENGINEERS
REGISTERED PROFESSIONAL ENGINEER
#E015494
Exp. 06-30-27
SCOTT WHEELER
ELECTRICAL
STATE OF CALIFORNIA
Date Signed: 08-27-2025

Issue No.	Date	Description
1	02/05/20 21	SFM REVIEW CORRECTION
2	7/14/23	50% PROGRESS SET
3	09/15/23	95% WORKING DRAWINGS

Project

DEVELOPMENT SERVICES

Supervisor	Designed	Drawn
Approver	Designer	Author

DSA App No.	SFM Permit No.
N/A	25-S-3084-C

Sheet Title
DEMOLITION PLAN - 2 BEDROOM

Project Number
000000000006803

Sheet Scale

Sheet Number
EA10

Copyright © 2021, California Department of General Services: Real Estate Services Division

ISSUE DATE: OCTOBER 28, 2026

RELATIVE BORDER SCALE IN INCHES 0 1 2 3

24 x 36
C:\Users\tyler\Documents\PSR_ELEC_CENTRAL_2BR_r22_tyler@engent.com.rvt
8/28/2025 8:21:33 AM

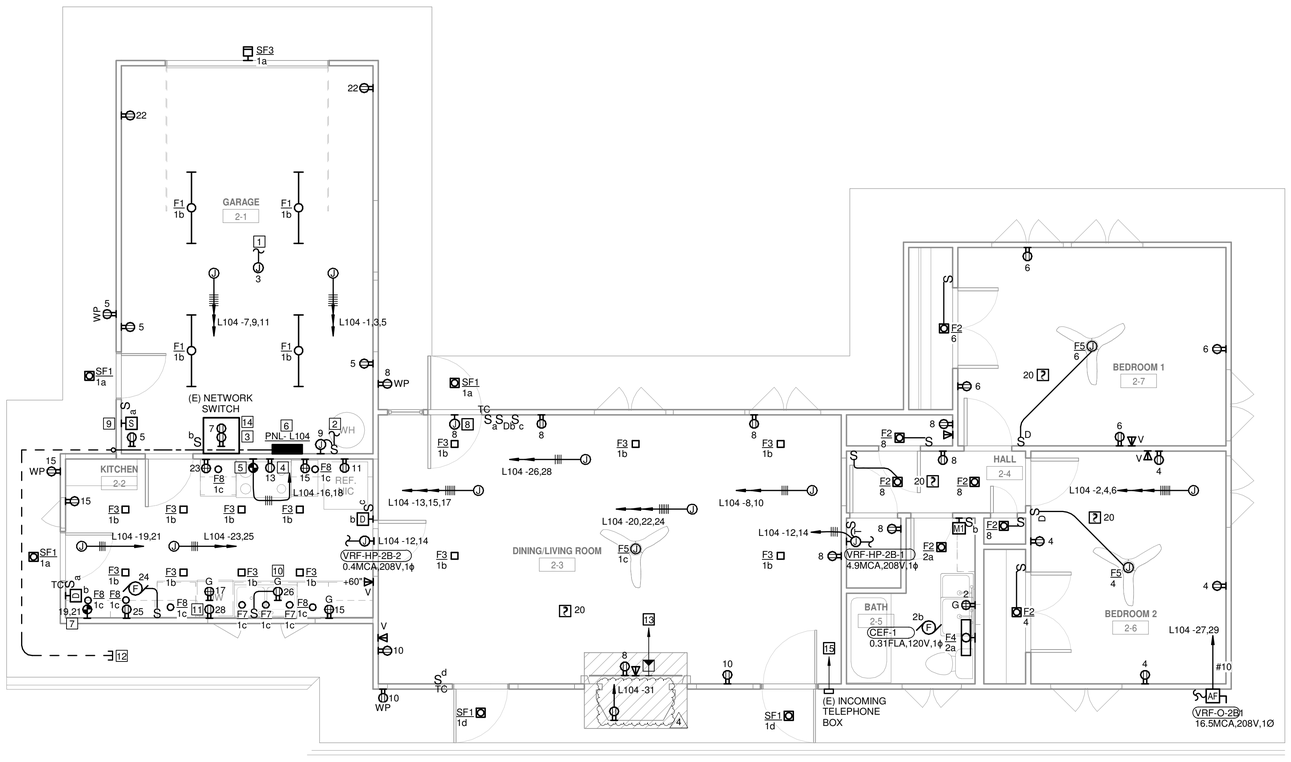

1 ELECTRICAL PLAN - 2 BEDROOM - 104 ORANGE

SCALE: 1/4" = 1'-0"

GENERAL SHEET NOTES

A. REFER TO MECHANICAL AND PLUMBING DRAWINGS FOR EXACT LOCATION OF UNITS AND ADDITIONAL INFORMATION ON ELECTRICAL REQUIREMENTS.

B. REFER TO ARCHITECTURAL DRAWINGS FOR LIGHTING AND DEVICE DIMENSIONS, INCLUDING JUNCTION BOXES. CONFIRM ALL MOUNTING HEIGHTS WITH ARCHITECT PRIOR TO ROUGH IN.

C. ALL HOMERUNS SHALL BE IN EMT CONDUIT, 3/4" MIN.

D. ALL DATA CABLES SHALL GO FROM THE DATA OUTLET TO THE NETWORK SWITCH IN GARAGE.

NUMBERED SHEET NOTES

1. PROVIDE 120V POWER CONNECTION TO MOTORIZED GARAGE DOOR OPENER.
2. PROVIDE 120V POWER CONNECTION TO GAS WATER HEATER IGNITER..
3. LOCATE RECEPTACLE AT +60"AFF FOR (E) NETWORK SWITCH. PROVIDE NEW CAT 6 FLAT 110-STYLE PATCH PANEL (LEVITON 69586-U89 OR EQUAL) WITH 12-PORT U89 WALLMOUNT BLOCK FOR CONNECTION OF NEW CAT6 CABLES.
4. PROVIDE DUPLEX RECEPTACLE WITH DEDICATED 120V CIRCUIT FOR WALLMOUNT MICROWAVE. REFER TO ARCHITECTURAL ELEVATIONS FOR EXACT LOCATION AND HEIGHT.\
5. PROVIDE N10/0R 120/240V SINGLE PHASE RECEPTACLE FOR OVEN/RANGE. FEEDER SHALL BE 3#6 CU CONDUCTORS IN 1" CONDUIT.
6. PROVIDE 100A, 120/208V, 1Ø ,3W SURFACE MOUNTED PANEL. PROVIDE NEW FEEDER PER ONE LINE DIAGRAM. REFER TO POWER ONE LINE DIAGRAM FOR FEEDER SIZE.
7. PROVIDE 30A, 240V, 2P RECEPTACLE, NEMA 10-30R, FOR DRYER.
8. PROVIDE 120V POWER TO DOORBELL SYSTEM AT +84"AFF. CENTER ABOVE DOOR. LOCATE BUTTON ON BUILDING EXTERIOR, ON LEFT SIDE OF FRONT DOOR.
9. CONTROL SWITCH FOR GARAGE DOOR OPENER.
10. PROVIDE RECEPTACLE ON DEDICATED CIRCUIT UNDERNEATH THE SINK FOR GARBAGE DISPOSAL. LOCATE SWITCH 6" ABOVE COUNTERTOP.
11. PROVIDE RECEPTACLE ON DEDICATED CIRCUIT UNDERNEATH THE COUNTER IN DISHWASHER CAVITY FOR DISHWASHER.
12. EXTEND EXISTING STUBBED CONDUIT TO NEW PANEL. REFER TO ONE LINE DIAGRAM ON E301 FOR FEEDER SIZE, AND DEMO PLAN ED101 FOR STUBBED LOCATION.
13. PROVIDE RG-6 COAXIAL CABLE FROM DEVICE TO NETWORK SWITCH FOR FUTURE TV CONNECTIONS. CABLE MUST HAVE 12" OF EXTRA SLACK, COILED ABOVE NETWORK SWITCH IN GARAGE.
14. PROVIDE 66 STYLE WIRING BLOCK FOR COPPER PHONE LINES (LEVITON 40066-M50 OR EQUAL) WITH 66-STYLE BRIDGING CLIPS AND 89D MOUNTING BRACKET. MOUNT ON WALL NEXT TO TELECOM PATCH PANEL FOR DISTRIBUTION OF CAT 5E PHONE CABLING THROUGHOUT BUILDING.
15. PROVIDE NEW CU CABLING (SAME # OF PAIRS AS INCOMING) FROM EXTERIOR PHONE BOX TO NEW WIRING BLOCK IN GARAGE. CABLE SHALL BE ROUTED THROUGH ATTIC SPACE.

LOAD CENTER: PNL- L104

Location: GARAGE 2-1 **Served From** (E) MSB **Phases** 1 **A.I.C. Rating:** 10kAIC **Bus Rating** 225 A

Mounting: SURFACE **Volts:** 120/208 Single **Wires** 3 **Main Type:** MCB **Main Rating:** 125 A

Load Served	Amp	Pole	#	A (kVA)		B (kVA)		#	Pole	Amp	Load Served
(1) LTG GARAGE,KITCHEN	20 A	1	1	1.44	0.26			2	1	20 A	(1) LTG & REC BATH
GARAGE OPENER	20 A	1	3			0.30	0.73	4	1	20 A	(1) LTG & REC BEDROOM
REC GARAGE	20 A	1	5	0.72	0.73			6	1	20 A	(1) LTG & REC BEDROOM
REC TELECOM CABINET	20 A	1	7			0.36	2.49	8	1	20 A	(1) LTG & REC DINING,HALL
WATER HEATER	20 A	1	9	0.10	0.54			10	1	20 A	(1) REC DINING
(1) REFRIGERATOR	20 A	1	11			0.60	1.00	12	2	20 A	VRF-HP-2B-1/2
MICROWAVE KITCHEN	20 A	1	13	0.50	1.00			14	--	--	--
(1) REC KITCHEN	20 A	1	15			0.72	0.50	16	2	50 A	OVEN/RANGE KITCHEN
(1) REC KITCHEN	20 A	1	17	0.50	0.50			18	--	--	--
DRYER	20 A	2	19			0.50	0.02	20	1	20 A	(2) SMOKE DETECTOR
--	--	--	21	0.50	0.36			22	1	20 A	REC GARAGE
REC KITCHEN	20 A	1	23			0.18	0.04	24	1	20 A	FAN KITCHEN
WASHER KICHEN 2-2	20 A	1	25	0.50	0.30			26	1	20 A	GARBAGE DISPOSAL
VRF-O-2B1	30 A	2	27			1.72	0.50	28	1	20 A	DISHWASHER
--	--	--	29	1.72	0.00			30	1	20 A	SPARE
FIREPLACE	20 A	1	31			1.47	0.00	32	1	20 A	SPARE
SPARE	20 A	1	33	0.00	--			34	1	--	space
space	--	1	35			--	--	36	1	--	space
space	--	1	37	--	--			38	1	--	space
space	--	1	39			--	--	40	1	--	space
space	--	1	41	--	--			42	1	--	space
			Total Load:	9.66 kVA		11.13					
			Total Amps:	93 A		105.12 A					

Load Classification	Conn. Load	Demand Factor	Est. Demand	Panel Totals	
Motor	3.43 kVA	125.00%	4.29 kVA	**Connected Load:**	20.79 kVA
Other	4.99 kVA	100.00%	4.99 kVA	**Connected Amps:**	99.96 A
Power	0.36 kVA	100.00%	0.36 kVA	**Est. Demand Load:**	21.06 kVA
Lighting	0.55 kVA	125.00%	0.69 kVA	**Est. Demand Amps:**	101.26 A
Receptacles	11.45 kVA	93.67%	10.73 kVA		

Notes:
{1} AFCI BREAKER
{2} PROVIDE A RED, LOCKING CIRCUIT BREAKER FOR FIRE ALARM CIRCUIT

THE SCOPE OF WORK INVOLVED IN THIS PROJECT IS EXEMPT FROM THE DIVISION OF THE STATE ARCHITECT ACCESSIBILITY REQUIREMENTS IN ACCORDANCE WITH TITLE 24, CALIFORNIA CODE OF REGULATIONS, 2016 CALIFORNIA BUILDING CODE.

REVISED FOR PERMIT SET

GENERAL SERVICES
Department of General Services
Architecture & Engineering Sections
State of California
Real Estate Services Division
Project Management & Development Branch
707 Third Street, Suite 4-105
West Sacramento, California 95605

The Engineering Enterprise
CONSULTING ENGINEERS
REGISTERED PROFESSIONAL ENGINEER #E011549 Exp. 06-30-27 SCOTT WHEELER ELECTRICAL STATE OF CALIFORNIA
SIGNED: 09-17-2026

Issue No.	Date	Description
2	7/14/23	50% PROGRESS SET
3	09/15/23	95% WORKING DRAWINGS
4	09/18/26	CHANGED FIREPLACE INSERT

Project

DEVELOPMENT SERVICES

Supervisor	Designed	Drawn
Approver	Designer	Author

DSA App No. N/A
SFM Permit No. 25-S-3084-C

Sheet Title
ELECTRICAL PLAN - 2 BEDROOM - 104 ORANGE

Project Number
000000000006803

Sheet Scale

Sheet Number
EA11

Copyright © 2021, California Department of General Services - Real Estate Services Division

ISSUE DATE: OCTOBER 28, 2026

RELATIVE BORDER SCALE IN INCHES

09/17/2026 1:17:42 PM C:\Users\Shane.Franke\Documents\PSR_ELEC_CENTRAL_2BR_i22_shane.franke.rvt

NUMBERED SHEET NOTES

1 REPLACE (E) #2/0 CONDUCTORS IN 2" CONDUIT WITH NEW FEEDER AS SHOWN.

THE SCOPE OF WORK INVOLVED IN THIS PROJECT IS EXEMPT FROM THE DIVISION OF THE STATE ARCHITECT ACCESSIBILITY REQUIREMENTS IN ACCORDANCE WITH TITLE 24, CALIFORNIA CODE OF REGULATIONS, 2016 CALIFORNIA BUILDING CODE.

REVISED FOR EXEMPTION

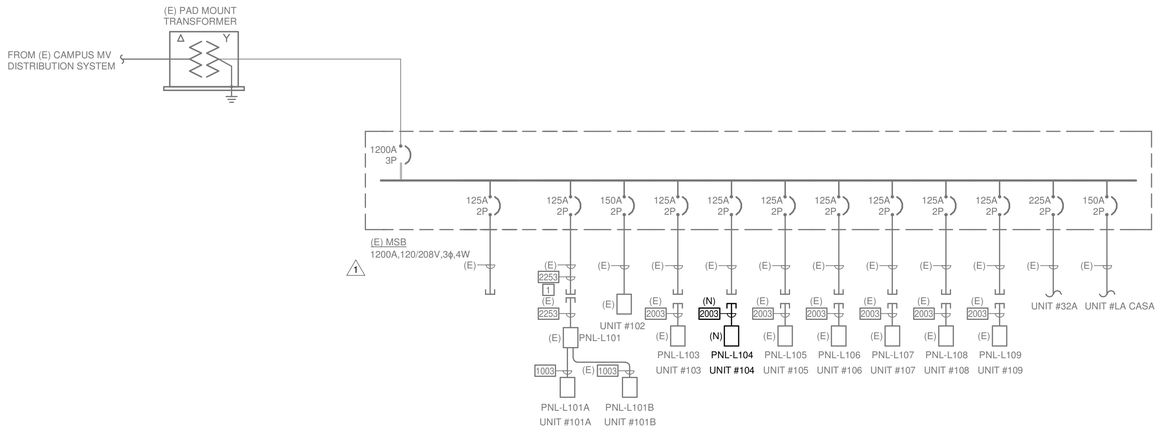

1 MODIFIED POWER ONE-LINE DIAGRAM

SCALE: NTS

NEW FEEDERS/EQUIPMENT ARE IN BOLD

FEEDER SCHEDULE

FEEDER SCHEDULE GENERAL NOTES

1. COPPER FEEDER SIZES SHOWN IN THIS SCHEDULE ARE BASED ON CONDUCTORS WITH THHN/THWN-2 INSULATION IN EMT CONDUIT.
2. FEEDER SIZES SHOWN IN THIS SCHEDULE ARE BASED ON AN AMBIENT TEMPERATURE OF 30 DEGREES C (86 DEGREES F).
3. FEEDERS CONSISTING OF MULTIPLE SETS OF CONDUCTORS AND CONDUITS ARE TO BE PROVIDED WITH THE INDICATED SIZE GROUND CONDUCTOR IN EACH CONDUIT.
4. PER CEC ARTICLE 110.14, ALL FEEDERS SIZED AT #2 AWG OR LESS ARE CALCULATED PER 60 DEGREE TABLE. FEEDERS GREATER THAN #2 AWG ARE RATED 75 DEGREE.

FEEDER SCHEDULE REMARKS

A. FEEDER GROUND AND BONDING JUMPER SHALL HAVE AN AREA NOT LESS THAN 12.5% OF THE AREA OF THE LARGEST PHASE CONDUCTOR.
B. INCREASE CONDUIT TO THE NEXT LARGER TRADE SIZE WHEN USING SCHEDULE 40 OR 80 PVC CONDUIT.
C. PER CEC SECTION 240.4(B), FOR OVERCURRENT DEVICES RATED 800A OR LESS, THE NEXT HIGHER STANDARD OVERCURRENT DEVICE RATING (ABOVE THE AMPACITY OF THE CONDUCTORS) CAN BE USED. RULE CAN NOT BE APPLIED IF 100% RATED BREAKERS ARE USED.

FEEDER TAG	FEEDER DESCRIPTION	CONDUIT	CONDUCTORS		SEPARATELY DERIVED SYSTEM		REMARKS 1
			PHASE/NEUTRAL	GROUND	GROUNDING ELECTRODE	BONDING JUMPER	
1003	95 AMP, 3 WIRE	1-1.25"	3 #2 CU	1 #8 CU	-	-	B,C
2003	200 AMP, 3 WIRE	1-2.00"	3 #3/0 CU	1 #6 CU	-	-	-
2253	230 AMP, 3 WIRE	1-2.50"	3 #4/0 CU	1 #4 CU	-	-	-

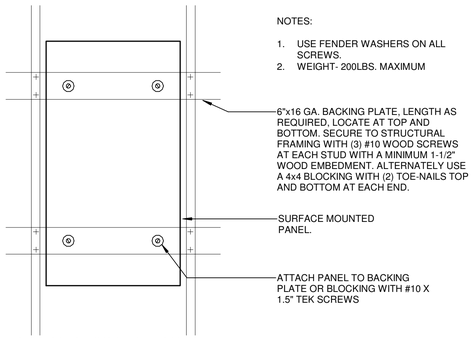

SURFACE MOUNTED PANEL, WOOD OR STEEL FRAMING - ELEVATION VIEW

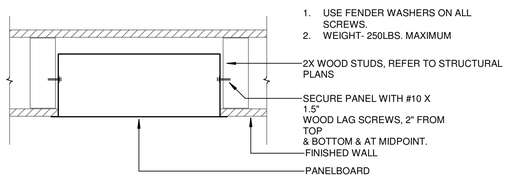

RECESSED PANEL IN WOOD OR STEEL FRAMED WALL - PLAN VIEW

2 SURFACE OR RECESSED PANELBOARD

SCALE: 12" = 1'-0"

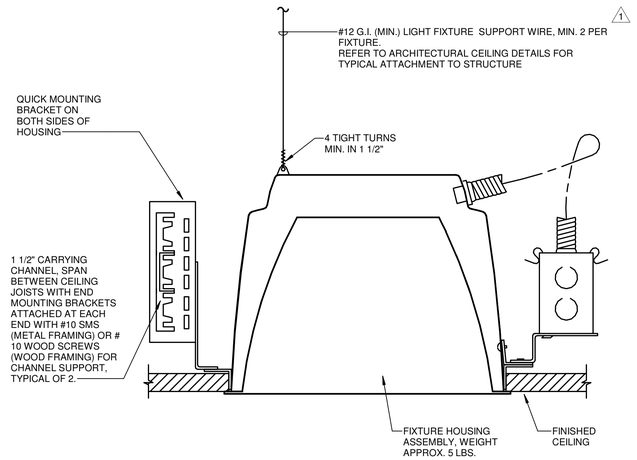

3 RECESSED DOWNLIGHT

SCALE:NTS

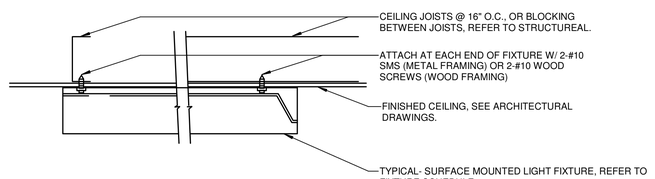

4 SURFACE MOUNTED LUMINAIRE

SCALE:NTS

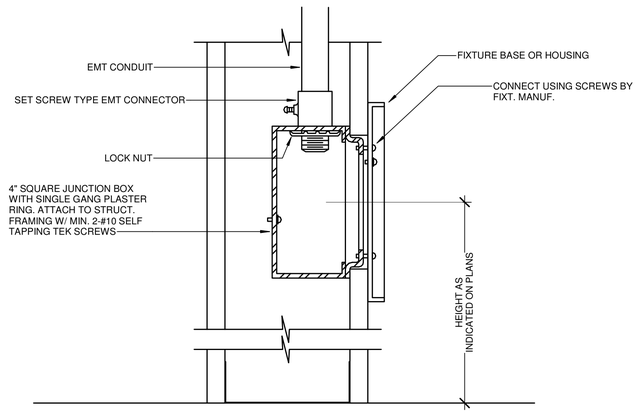

GENERAL NOTE:

FOR FIXTURES OVER 16" IN LENGTH OR OVER 15 LBS., CONTRACTOR IS TO PROVIDE #16 GAUGE STEEL BACKING ATTACHED TO (3) STUDS WITH (2) #8 SHEET METAL SCREWS PER STUD. ATTACH FIXTURE TO BACKING WITH #10 X 1.5" TEK SCREWS.

5 WALL MOUNTED LUMINAIRE

SCALE:NTS

GENERAL SERVICES
Department of General Services
Architecture & Engineering Sections
State of California
Real Estate Services Division
Project Management & Development Branch
707 Third Street, Suite 4-105
West Sacramento, California 95605

The Engineering Enterprise
CONSULTING ENGINEERS
REGISTERED PROFESSIONAL ENGINEER #E015402 Exp.06-30-27 SCOTT WHEELER ELECTRICAL STATE OF CALIFORNIA
Date Signed: 08-27-2025

Issue No.	Date	Description
1	02/05/2021	SFM REVIEW CORRECTION
2	7/14/23	50% PROGRESS SET
3	09/15/23	95% WORKING DRAWINGS

Project

DEVELOPMENT SERVICES

Supervisor	Designed	Drawn
Approver	Designer	Author

DSA App No.	SFM Permit No.
N/A	25-S-3084-C

Sheet Title

POWER ONE LINE DIAGRAM & DETAILS

Project Number

000000000006803

Sheet Scale

Sheet Number

E300

Copyright © 2021, California Department of General Services- Real Estate Services Division

ISSUE DATE: OCTOBER 28, 2026

C:\Users\tyler\Documents\PSR_ELEC_CENTRAL_2BR_r22_tyler@engent.com.rvt
8/28/2025 8:21:32 AM

RELATIVE BORDER SCALE IN INCHES